FILE

S. HRG. 102-118

AUTHORIZATION OF FUNDS FOR THE PATENT AND TRADEMARK OFFICE

HEARING

BEFORE THE

SUBCOMMITTEE ON PATENTS, COPYRIGHTS AND TRADEMARKS

OF THE

COMMITTEE ON THE JUDICIARY UNITED STATES SENATE

ONE HUNDRED SECOND CONGRESS

FIRST SESSION

ON

S. 793

A BILL TO AUTHORIZE APPROPRIATIONS FOR THE PATENT AND TRADEMARK OFFICE IN THE DEPARTMENT OF COMMERCE, AND FOR OTHER PURPOSES

F/W PL 102-204

APRIL 11, 1991

Serial No. J-102-11

Printed for the use of the Committee on the Judiciary

U.S. GOVERNMENT PRINTING OFFICE

45-117 == WASHINGTON : 1991

For sale by the Superintendent of Documents, Congressional Sales Office
U.S. Government Printing Office, Washington, DC 20402

COMMITTEE ON THE JUDICIARY

JOSEPH R. BIDEN, JR., Delaware, *Chairman*

EDWARD M. KENNEDY, Massachusetts
HOWARD M. METZENBAUM, Ohio
DENNIS DECONCINI, Arizona
PATRICK J. LEAHY, Vermont
HOWELL HEFLIN, Alabama
PAUL SIMON, Illinois
HERBERT KOHL, Wisconsin

STROM THURMOND, South Carolina
ORRIN G. HATCH, Utah
ALAN K. SIMPSON, Wyoming
CHARLES E. GRASSLEY, Iowa
ARLEN SPECTER, Pennsylvania
HANK BROWN, Colorado

RONALD A. KLAIN, *Chief Counsel*
JEFFREY J. PECK, *Staff Director*
TERRY L. WOOTEN, *Minority Chief Counsel and Staff Director*

SUBCOMMITTEE ON PATENTS, COPYRIGHTS AND TRADEMARKS

DENNIS DECONCINI, Arizona, *Chairman*

EDWARD M. KENNEDY, Massachusetts
PATRICK J. LEAHY, Vermont
HOWELL HEFLIN, Alabama

ORRIN G. HATCH, Utah
ALAN K. SIMPSON, Wyoming
CHARLES E. GRASSLEY, Iowa

KAREN ROBB, *Chief Counsel and Staff Director*
MARK DISLER, *Minority Chief Counsel*

CONTENTS

OPENING STATEMENT

Page

DeConcini, Hon. Dennis, a U.S. Senator from the State of Arizona 1

PROPOSED LEGISLATION

S. 793, a bill to authorize appropriations for the Patent and Trademark Office in the Department of Commerce, and for other purposes 3

CHRONOLOGICAL LIST OF WITNESSES

Harry M. Manbeck, Jr., Commissioner, U.S. Patent and Trademark Office, Crystal City, VA, accompanied by Bradley R. Huther, Assistant Commissioner for Finance and Planning 11

Panel consisting of Donald W. Banner, president, Intellectual Property Owners, Inc., Washington, DC; Jerome G. Lee, president, American Intellectual Property Law Association, Arlington, VA; and Thomas F. Smegal, Jr., American Bar Association, San Francisco, CA 73

Panel consisting of Richard D. Godown, president, Industrial Biotechnology Association, Washington, DC; Herbert S. Goldberg, associate dean, School of Medicine, University of Missouri, Columbia, MO; and Garo Partoyan, president, U.S. Trademark Association, New York, NY 150

ALPHABETICAL LIST AND MATERIAL SUBMITTED

Banner, Donald W.:
- Testimony 73
- Prepared statement 75
- Responses to questions submitted by:
  - Senator DeConcini 95
  - Senator Biden 100

Godown, Richard D.:
- Testimony 150
- Prepared statement 153
- Responses to questions submitted by:
  - Senator DeConcini 177
  - Senator Grassley 181

Goldberg, Herbert S.:
- Testimony 183
- Prepared statement 185
- Responses to questions submitted by Senator DeConcini 189

Lee, Jerome G.:
- Testimony 103
- Prepared statement 105
- Responses to questions submitted by Senator DeConcini 118

Manbeck, Harry M., Jr.:
- Testimony 11
- Prepared statement 21
- Responses to questions submitted by:
  - Senator DeConcini 33
  - Senator Biden (with attachments) 49
  - Senator Leahy (with attachments) 62

Page

Partoyan, Garo:
Testimony 191
Prepared statement 193
Responses to questions submitted by Senator DeConcini 200
Smegal, Thomas F., Jr.:
Testimony 124
Prepared statement 126
Responses to questions submitted by Senator DeConcini 141

APPENDIX

Additional Statements

Statements of:
Ronald R. Kranzow, senior vice president, Frito-Lay, Inc. 205
Howard W. Bremer, legal consultant, Wisconsin Alumni Research Foundation, on behalf of the Association of University Technology Managers and American Council on Education 207

AUTHORIZATION OF FUNDS FOR THE PATENT AND TRADEMARK OFFICE

THURSDAY, APRIL 11, 1991

U.S. SENATE,
SUBCOMMITTEE ON PATENTS, COPYRIGHTS AND TRADEMARKS,
COMMITTEE ON THE JUDICIARY,
Washington, DC.

The subcommittee met, pursuant to notice, at 1:44 p.m., in room SD-226, Dirksen Senate Office Building, Hon. Dennis DeConcini (chairman of the subcommittee) presiding.

Also present: Senator Grassley.

OPENING STATEMENT OF HON. DENNIS DeCONCINI, A U.S. SENATOR FROM THE STATE OF ARIZONA

Senator DECONCINI. The hearing will come to order. Senator Hatch, the ranking member, will be here a little late; he is tied up at some other hearings or meetings.

Today, the subcommittee will discuss the administration's proposal to authorize the operation of the Patent and Trademark Office. On April 9, Senator Hatch and I introduced, by request, the administration's authorization bill, S. 793. I would like to thank Commissioner Manbeck for being here today to testify on behalf of the administration's bill. We look forward to your testimony, as usual. I know how busy you are, Commissioner, and I really do appreciate the time that you give us here to help us understand your needs.

Last year's budget resolution had a dramatic impact upon the Patent Office. The Budget Summit of last year produced an agreement that required a number of Federal agencies to tighten their budgets and reduce their reliance on appropriated money. Unfortunately, one of those agencies was the Patent Office.

In the past, the Patent Office had been operating on a budget of about two-thirds user fees and one-third appropriated money. By eliminating appropriated money for the Patent Office, the budget agreement forced the Judiciary Committees of the House and Senate to add a 69-percent surcharge on all patent fees to make up for the shortfall. You can rest assured that I was not pleased with raising patent fees through a budget agreement—indeed, a budget agreement that I opposed and voted against.

With the practical elimination of public money for the Patent Office, the operation of the Office has become all the more difficult. The Patent Office must tailor its complete budget on the uncertain-

ty of projected future patent filings. I want to commend the Commissioner and his staff for their operation of the Patent Office and its budget in light of last year's budget agreement. It is no easy task. I know that it would be much easier to, as in the past, rely partially, or even all, on appropriated money. It is a very difficult job even without the headaches caused by the budget, I must admit.

The administration's authorization bill provides for a 2-year authorization cycle instead of the current 3-year cycle. It would authorize a $462 million budget for 1992 and a $550 million budget for 1993. Thus, the administration is asking for a 32-percent increase in its budget for 1992.

Although we are aware that the Patent Office is involved in some long-term costly programs, I believe that the administration is going to have to present a strong justification for such a large increase in its budget. The fact that the Patent Office is now almost completely user fee-funded does not lessen the need to cut budgets considering the fiscal terms that this country is in.

Under current law, small entities, which include small businesses, independent inventors and universities, receive a 50-percent discount on all patent fees. I've been a supporter of this provision and have opposed past attempts by the administration to eliminate the small entity category. The small entity category has proven to be important protection for independent inventors and universities from the continually rising patent fees over the years.

In their authorization proposal, the administration proposes to continue the small entity exemption, but only the initial filing fee. Thus, the Patent Office would subsidize their increased budget for fiscal year 1992 by increasing the issuing fee and all other fees of small entities. However, the administration proposes no change in the large entity fees. I believe the administration has the burden to justify why their increased budget must be generated by small entities and why this proposal is a fair patent fee structure.

Last year after the budget agreement was signed into law, I promised the Patent Office, as well as the patent community, that we would hold hearings on the patent fee situation early in the next year, and that is what we are doing, today. The patent community will have an opportunity to testify, and, of course, Commissioner, we are pleased that you have an opportunity to testify to address some of the questions that I have raised.

The budget situation has placed a difficult burden on both the Office and the patent community, and I know that all concerned parties have their own solutions and we are here to listen to some of them.

[A copy of S. 793 follows:]

II

102D CONGRESS
1ST SESSION

S. 793

To authorize appropriations for the Patent and Trademark Office in the Department of Commerce, and for other purposes.

IN THE SENATE OF THE UNITED STATES

APRIL 9, 1991

Mr. DECONCINI (for himself and Mr. HATCH) (by request) introduced the following bill; which was read twice and referred to the Committee on the Judiciary

---

A BILL

To authorize appropriations for the Patent and Trademark Office in the Department of Commerce, and for other purposes.

Be it enacted by the Senate and House of Representatives of the United States of America in Congress assembled,

SECTION 1. AUTHORIZATION OF APPROPRIATIONS.

(a) IN GENERAL.—There are authorized to be appropriated to the Patent and Trademark Office for salaries and necessary expenses, $98,300,000 for fiscal year 1992, and $102,300,000 for fiscal year 1993. Of such amounts, $95,000,000 for fiscal year 1992 and $99,000,000 for fiscal year 1993 shall be derived from deposits in the Patent

and Trademark Office Fee Surcharge Fund as established under section 10101 of the Omnibus Budget Reconciliation Act of 1990 (Public Law 101–508).

(b) CREDIT OF CERTAIN REVENUES.—Notwithstanding the provisions of section 10101 of the Omnibus Budget Reconciliation Act of 1990 (Public Law 101–508), revenues from Patent and Trademark Office surcharges in excess of $88,000,000 in fiscal year 1991, $95,000,000 in fiscal year 1992, and $99,000,000 in fiscal year 1993, shall be credited to Salaries and Expenses, Patent and Trademark Office, without further appropriations actions in the same manner as fees authorized under subsections (a) and (b) of section 41 of title 35, United States Code.

(c) NO REVISION OF SURCHARGE.—Notwithstanding section 10101(c) of the Omnibus Budget Reconciliation Act of 1990 (Public Law 101–508), the Commissioner of Patents and Trademarks shall not revise the surcharge set under section 10101(a) of such Act in fiscal years 1992 and 1993.

(d) APPROPRIATIONS TO REMAIN AVAILABLE UNTIL EXPENDED.—Amounts appropriated pursuant to this Act and such fees as may be collected under chapter 4 of title 35, United States Code, and the Trademark Act of 1946

(15 U.S.C. 1051 et seq.) shall remain available until expended.

SEC. 2. OVERSIGHT OF PATENT AND TRADEMARK FEES.

On the date each year that the President submits the budget to the Congress under section 1105 of title 31, United States Code, the Secretary of Commerce shall submit to the Committees on the Judiciary of the Senate and the House of Representatives—

(1) a list of patent and trademark fee collections by the Patent and Trademark Office during the preceding fiscal year;

(2) a list of activities of the Patent and Trademark Office during the preceding fiscal year which were supported by patent fee expenditures, trademark fee expenditures, and appropriations;

(3) budget plans for significant programs, projects, and activities of the Patent and Trademark Office, including out-year funding estimates;

(4) any proposed disposition of surplus fees by the Patent and Trademark Office; and

(5) such other information as the Committees consider necessary.

SEC. 3. PATENT AND TRADEMARK FEES.

(a) PATENT FEES.—Section 41 of title 35, United States Code, is amended—

(1) by amending subsection (d) to read as follows:

"(d) The Commissioner will establish fees for all other processing, services, or materials related to patents not specified above or authorized elsewhere to recover, in the aggregate with other revenues, the estimated cost of the operations of the Patent and Trademark Office. The yearly fee for providing a library specified in section 13 of this title with uncertified printed copies of the specifications and drawings for all patents issued in that year will be $50.";

(2) by amending subsections (f) and (g) to read as follows:

"(f) The fees established in subsections (a) and (b) of this section may be adjusted by the Commissioner on October 1, 1993, and every second year thereafter, to reflect any fluctuations occurring during the previous 2 years in the Consumer Price Index, as determined by the Secretary of Labor. Changes of less than 1 percent may be ignored.

"(g) No fee established by the Commissioner under this section will take effect prior to 30 days following notice in the Federal Register.";

(3) in subsection (h) by amending paragraph (1) to read as follows:

"(h)(1) Fees charged under subsection (a) on filing any application for a patent shall be reduced by 50 percent with respect to their application to any small business concern as defined under section 3 of the Small Business Act, and to any independent inventor or nonprofit organization as defined in regulations issued by the Commissioner of Patents and Trademarks."; and

(4) by adding at the end thereof the following new subsection:

"(i)(1) The Commissioner of Patents and Trademarks shall maintain, for use by the public, paper or microform collections of United States patents, foreign patent documents, and United States trademark registrations arranged to permit search for and retrieval of information. The Commissioner may not impose fees directly for use of such collections, or for use of the public patent or trademark search rooms or libraries.

"(2) The Commissioner of Patents and Trademarks may establish reasonable fees for access by the public to automated search systems of the Patent and Trademark Office. If such fees are established, a limited amount of free access shall be made available to all users of the systems for purposes of education and training. The Commissioner may waive the payment by an individual of fees au-

thorized by this subsection upon a showing of need or hardship, and if such a waiver is in the public interest.".

(b) PATENT AND TRADEMARK OFFICE FUNDING.—Section 42(c) of title 35, United States Code, is amended to read as follows:

"(c) Revenues from fees will be available to the Commissioner of Patents and Trademarks to carry out, to the extent provided for in appropriations Acts, the activities of the Patent and Trademark Office. Fees available to the Commissioner under section 31 of the Trademark Act of 1946, as amended, shall be used for the processing of trademark registrations and for other activities, services and materials relating to trademarks. Trademark fees collected may only be reprogrammed for other purposes subject to the procedures for reprogramming set forth in the Department of Commerce's annual appropriations Act.".

(c) TRADEMARK FEES.—Section 31(a) of the Trademark Act of 1946 (15 U.S.C. 1113), is amended to read as follows:

"(a) The Commissioner will establish fees for the filing and processing of an application for the registration of a trademark or other mark and for all other services performed by and materials furnished by the Patent and Trademark Office related to trademarks and other marks. However, no fee for the filing or processing of an applica-

tion for the registration of a trademark or other mark or for the renewal or assignment of a trademark or other mark will be adjusted more than once every 2 years. No fee established under this section will take effect prior to 30 days following notice in the Federal Register.".

SEC. 4. USE OF EXCHANGE AGREEMENTS RELATING TO AUTOMATIC DATA PROCESSING RESOURCES PROHIBITED.

During fiscal years 1992 and 1993, the Commissioner of Patents and Trademarks may not enter into any agreement for the exchange of items or services (as authorized under section 6(a) of title 35, United States Code) relating to automatic data processing resources (including hardware, software and related services, and machine readable data). The preceding sentence shall not apply to an agreement relating to data for automation programs which is entered into with a foreign government or with an international intergovernmental organization.

SEC. 5. REPEAL OF MISCELLANEOUS FEE PROVISIONS.

Subsections (b) and (c) of section 104 of the Act entitled "An Act to authorize appropriations for the Patent and Trademark Office in the Department of Commerce, and for other purposes", approved November 19, 1988 (35 U.S.C. 41 note; Public Law 100–703; 102 Stat. 4675) are repealed.

SEC. 6. EFFECTIVE DATE.

The provisions of this Act and the amendments made by this Act shall be effective on and after October 1, 1991, and shall apply to all payments of fees made on or after such date.

Senator DECONCINI. Commissioner, you may go right ahead.

STATEMENT OF HARRY M. MANBECK, JR., COMMISSIONER, U.S. PATENT AND TRADEMARK OFFICE, CRYSTAL CITY, VA, ACCOMPANIED BY BRADLEY R. HUTHER, ASSISTANT COMMISSIONER FOR FINANCE AND PLANNING

Mr. MANBECK. Thank you very much, Mr. Chairman. With your permission, I will not read from my prepared remarks, prepared submission, but rather will try to highlight some things.

Senator DECONCINI. We will put it in the record, Commissioner. Thank you.

Mr. MANBECK. I would like to start out by introducing Mr. Brad Huther, who is sitting here at the table with me, who is the Assistant Commissioner for Finance and Planning of the Patent Office. And with your permission, we will use some charts in our presentation, and we have brought along our own Vanna White, Ms. Peggy Rader, to turn the charts for us. [Laughter.]

Senator DECONCINI. I don't know if you are going to get it, but go ahead. [Laughter.]

Mr. MANBECK. As you pointed out, Mr. Chairman, the Patent Office has, for quite a long period, been financed from two sources—public funds—in other words, taxpayer money—and from user fees. In the late 1980's, the relationship between the two was, as you indicated, two-thirds, one-third. We say on our chart 60 percent fees, 40 percent public money.

The Budget Reconciliation Act did make a congressional decision that the Patent Office would be essentially fully fee-funded. Now, the budget reconciliation process went very fast and there really was not time or the opportunity to consider some long-range Patent and Trademark Office programs and the significant costs of those programs.

Now, these programs specifically are our automation program, the program which we are undertaking in the biotech area, and quality enhancement in the Office to try to make every patent issued just as valid as we can when it comes out.

Now, what has happened is these things have come to the fore just at the same time as the change in the method of financing occurred. On the next chart, we show the historical program level and the fees of the Patent Office broken down, the red part being fees, of course, and the blue the public moneys.

Because of these initiatives which I am talking about and because of increasing workload, and also because of inflation, we are in the position that we can't carry on the programs of the Patent and Trademark Office without asking for your approval for an increased budget over this last year—in other words, 1992 and 1993 over 1991.

Now, the increase essentially comes from three parts—not exactly, but, you know, in that range—a third from the programs I have mentioned; a third, inflation, which we can't control; and a third from increased workload. Now, the workload of the Patent Office has increased steadily since the mid-1980's. For some period, we were at 100,000 applications; we are now at 164,000 and we are

growing. We can't handle that increased workload without increasing people, but this is somewhat self-correcting.

If we do not get increased workload, we will not need as much money, we will not collect as much money, and the Patent Office budget, in fact, will be less than shown in this chart. Now, I can illustrate this by the 1990 and 1991 bars which you see there. You will note the 1991 bar is slightly higher than the 1990, but, actually, with our workload, which is greater than 1990, but not as much as we had expected, we have already cut programs, cut our spending, so that in 1991 we will spend about as much as in 1990. And if our workload doesn't go up as we expect in 1992, we will do the same thing; we will cut. But we have to plan, sir, for that workload to go up because that has been the historical pattern.

We seem to have a little bit of a plateau right now, but that may be due to the recession. We don't know. The plateau, incidentally, started to occur before the fee change last October. So we have the increase there in the workload, we have the inflationary factors, and we have the program factors.

We have, we think—not only we think, we believe—been running a very efficient Patent Office. We issue patents faster than any major patent office in the world, any major examining office. We issue them for less money, and we have no reason to believe our quality is not as good as anybody else in the world.

Now, if you will refer particularly to the left-hand bar and the two right-hand bars in the chart, you will see that the fees in the United States for a large entity for prosecuting and issuing and maintaining a patent for its life is about $6,700 today. This contrasts in Japan with patent office fees of $18,400. And if you go to Europe you have to get five patents to cover anywhere near the same trading base as the United States, and getting those and maintaining those through the European Patent Office costs about $48,000 for the lives of the patents.

Senator DECONCINI. Excuse me. Is that for all fees across all categories?

Mr. MANBECK. The fees to file, to issue, and to maintain for life.

Senator DECONCINI. For life?

Mr. MANBECK. For life.

Senator DECONCINI. Thank you.

Mr. MANBECK. And I might point out that our average issuing time is 18 months; some are longer. For example, biotech—we wish it were shorter, and that is where we need money, for one place, is to put it into biotech to bring that pendency down. The biotech people very much want it. We spend more money per application there than we do most other areas in the Office now, but we still need more. The European Patent Office takes some 4 years, as contrasted to our 18 months. So we think, you know, looking at fees and looking at time and looking at validity, we are doing a pretty good job.

Now, we have suggested a change in the small entity subsidy, as you pointed out. When the subsidy was enacted in 1983, the basis, or at least some of the thinking on which it was done, is that the small entities would be subsidized by taxpayer funds, and this was done right up until the Budget Reconciliation Act. But since the

Budget Reconciliation Act, the only way that we can subsidize the small users is through the fees of the large users.

Our next chart shows the situation in which we are today and how we would propose to take in 1991. Today, the large entities are subsidizing the small entities to the extent of that pink area you see in the chart. Our small entities are about 35 percent, give a percent or two, of the filings in the agency, and they pay, of course, only about 17 to 18 percent of the fees. This means that they are getting a very large subsidy not from the taxpayers, but from the large entities.

What we propose is to put in a system which we think is more equitable, where the large users will still subsidize the small users to a significant extent, but not as much as today. As you pointed out, we propose a system where the small user comes in at a reduced fee, can prosecute his application, and then, when he or she sees what they are going to get, can decide whether or not the patent is worth something and whether they wish to take it and maintain it.

Since people do enter the system for personal gain—I think we have to admit that; people don't take out patents for eleemosynary reasons—we think it is fair that they should bear more of the costs and that the larger users not be taxed so much.

There has been some comment, I know, about the oversight role of the Congress now that we are in this fee-funded system. We believe it is no different than it ever was, and will be no different under this bill. After all, that is why we are here, is for oversight, and we would expect to be bringing our programs here and to have them approved or disapproved, as the Congress should choose, and to be working with the Senators, Congressmen and their staffers as we always have. So we really don't think there is anything to this.

That is all I have, sir, and I would be glad to answer any questions.

Senator DECONCINI. Mr. Huther, do you have any statement?

Mr. HUTHER. No, sir.

Senator DECONCINI. You are here to answer the tough questions.

Senator Grassley, do you have any opening statement?

Senator GRASSLEY. No, but I have a few questions I want answered.

Senator DECONCINI. OK.

Senator GRASSLEY. I am going to leave at 10 minutes after 2'clock.

Senator DECONCINI. Well, then, I am going to yield to you and let you ask your questions right now.

Senator GRASSLEY. Well, thank you. I appreciate that. I am going to go to a meeting of the Budget Committee, and so I want to take the opportunity to state the reason for my absence from the rest of the meeting.

Senator DECONCINI. You go right ahead.

Senator GRASSLEY. Thank you very much for your testimony. I got in on the tail end of it. I enjoyed the charts and I thought they were very worthwhile, in presenting your evidence to us.

How many applicants are large entities and how many are small entities, and of these how many are domestic applicants and how many are foreign?

Mr. MANBECK. We had about 164,00 patent applications filed last year, so-called utility applications. The split was about 35 percent small applicants—that includes universities, individuals, and small businessmen—and about 65 percent were the large applicants. Of the 35 percent that were small applicants, I believe about 8 percent of the 35—that is, 8 of 35—were foreign small applicants, which would leave 27 percent to be U.S. small applicants.

Senator GRASSLEY. And, on large entities, how many were foreign?

Mr. HUTHER. Senator, of the 65 percent, approximately, that comprise the large entity category, the split of that percentage would be 30 percent from the United States, 35 percent foreign.

Senator GRASSLEY. Instead of increasing fees, let me ask you why you wouldn't allow the pendency period to increase, and that way, I guess I would say, save money.

Mr. MANBECK. Senator, this would be a very short-term and, I believe, unsatisfactory solution. At one time, the Patent Office pendency was 22 months and was growing, and there is a great deal of testimony in the Congress about the need to keep pendency down primarily for the people who are taking out patents and who want to raise money with them, who want to bring out new products and who want to have their patent coverage somewhat coextensive with those products.

We could save money perhaps for a couple of years by letting pendency slide, but then once you let it slide, you are right back in the same box. If you let it slide, say, to 20 months, when you get to 20 months then you still have to have the size of office to maintain it at 20 months that we are saying now to maintain it at 18 months. It is not a long-term solution.

Senator GRASSLEY. I didn't look at the specifics of the charts you had, but how do your fees compare to the fees in Japan and the fees at the European Patent Office?

Mr. MANBECK. We are far cheaper, sir. The U.S. Patent Office, for a large user over the life of the patent, collects about $6,700.

Senator DECONCINI. Put that chart back up for the Senator.

Mr. MANBECK. Yes. Could we put it back up?

The Japanese Patent Office collects $18,400 and the European Patent Office—well, we have it there on the right for five countries because to get the same trading base, you need five countries—is about $48,000. But perhaps a fairer comparison would be to take the German Patent Office, which is—I won't say fairer, but if you want to take one country, the German Patent Office, which is the third block from the right, looks to me on there to be about $16,000. So we think we are doing a very good job, sir.

Senator GRASSLEY. What is the pendency period in the European Patent Office and the Japan Patent Office, and how does our automation program compare with theirs?

Mr. MANBECK. All right. In the European Patent Office, the pendency is about 4 years today. Their automation program is just barely getting off the ground. We are far ahead of them, and if you would like more detail on that, I could have Mr. Huther go into it because he has been working with both patent offices.

In Japan, the Japanese are ahead of us. They have spent over $1 billion on their program, and they have a program today with their

database on a computer which they can search. However, they do not have what we have. We can search by text; in other words, by key words, we can go into our database and search. They cannot do that; they have to use something called F terms.

We have a distributed system which we believe is ideally suited for deployment now and will accommodate a great deal more capacity. They are already running into trouble because they are choking on their mainframe computer, but they are ahead of us at this point.

Senator GRASSLEY. Your plan for fiscal year 1992 includes increasing staffing of the program by over 1,000 positions, is that right, as well as moving forward with a very ambitious automation program? As the automation program moves forward, will the Office have the need of this level of staffing? You know, you ought to get some efficiency out of the automation program?

Mr. MANBECK. Well, I agree with you, sir. May I explain further?

Senator GRASSLEY. Yes.

Mr. MANBECK. First of all, I would like to turn to the automation program and come back to the people, if I may. The reason the costs go up so significantly on the automation program is that, as a result of years of work, the program is now ready for deployment across the entire Patent Office, and also ready for installation so that public users can come in and use it, too.

The automation program is now in 2 groups, 2 of our examining groups, out of 16 or 18, and their databases are up and running now. But, of course, that is only a small part of the total database. What we propose to do in the 1992-1993 timeframe is buy and install the equipment which will make the automated patent system available across the Office to all the examiners with all the modern U.S. database on it—that is, 1971 patents on up—with the Japanese-English language abstracts, and, in time, the cover sheets of the European patents.

This will give us a much more reliable database and, in time, will enable us to get rid of the paper files. We have 140 search rooms in the Patent Office that we have to keep putting paper in, taking paper out, where paper may be missing as the examiners search 31 million documents. We have 15 million documents in the public search room, and we may need to keep the paper files there for a long time.

But we will get cost reductions in space, in file maintenance, and we are going to avoid drowning in paper, which we otherwise would over a period of time, by the installation of the automated patent system.

Now, we expect, in time, with that as a base, to get productivity equipment. The next step will be to go to a system using the automated system as the base where we will take in the applications electronically, process them through the Office all the way on the computer—all the changes, et cetera, made there—and then print them off the computer.

This will give us very significant preexamination savings in pendency time, very significant postexamination savings in time, and should enable us to take $20 million a year out of the printing bill. We spend almost $30 million a year now printing patents be-

cause we have no better way to do it. We do it as cheap as we can, but it costs a lot of money.

We cannot promise you that the examiners themselves can search faster on the automated system than they can in paper, but with the automated system they have a totally reliable database; there is never a patent missing. Also, they will have a much wider database because of the things we can put on it; therefore, we believe able to have less errors in the issuance of patents.

Senator GRASSLEY. Thank you, Mr. Chairman. I am done. I would like to submit some questions to the other panels for response in writing even though I can't be here, and apologize for not being here.

Senator DECONCINI. We would be glad to do that, Senator Grassley.

Mr. Commissioner, speaking of your Office budget, last year when we were over there getting a tour you were talking about some new leases. Have you made those leases, and did you realize any savings due to the economic conditions, at least last year, that appeared to be there?

Mr. MANBECK. Sir, we did execute two leases, one for the so-called South Tower Building, which is down at the south end of the Crystal City area, and one for Crystal Mall I, and we are occupying those buildings today. It is very satisfactory space and we are glad we have the buildings because we need the space. But we have not realized the savings we hoped we would because our rent was raised by the General Services Administration for this fiscal year.

Senator DECONCINI. Those buildings are owned by GSA?

Mr. MANBECK. No, but under the authority we have, we must deal through GSA.

Senator DECONCINI. I thought there was surplus office space; that the Navy was moving out, and that there were going to be some possible savings involved. That didn't materialize?

Mr. MANBECK. Well, the Navy has not moved out. It is our understanding that the cost of the space itself did not go up. In other words, the Government is not paying more money.

Senator DECONCINI. But you are?

Mr. MANBECK. But we are because GSA, as Mr. Huther could explain better, but as I understand it, charges a general rate. Now, if the Congress were to give us the authority to deal directly, we would, of course.

Senator DECONCINI. Have you thought about getting GSA to buy the buildings?

Mr. MANBECK. No, we have not done that. I will tell you what we have done, Senator, and that is we are in the beginning of a space plan. In other words, the leases in Crystal City run out, in general, in 1996, although there are options to extend. And we are trying to work up a plan now that says what should the Patent and Trademark Office do to get good space at the least possible money. In other words, we are trying to figure out, should we ask for the authority to buy buildings or to put up a building specially tailored to the needs of the Patent Office.

Senator DECONCINI. That has never been done before?

Mr. MANBECK. It has for other agencies, I believe, but not for the Patent and Trademark Office.

Senator DECONCINI. Are you any more consolidated now than you were when we were there last year, or are you still in three different——

Mr. MANBECK. No. No one building in Crystal City would take us. We are now at about 4,000 people, but it would be, you know, just speaking off the top of my head, if I may, very attractive to have a building specially tailored to our needs.

Senator DECONCINI. You mentioned about the oversight of Congress, even though you are now funded totally by fees. The Budget Act requires the Patent Office to save $95 million for 1992 through the 69-percent surcharge increase. How much money will the 69-percent surcharge actually generate? Do you know?

Mr. MANBECK. May I ask Mr. Huther?

Senator DECONCINI. Yes. Mr. Huther?

Mr. HUTHER. Again, going back to the Commissioner's comments concerning workload, assuming the patent application filings that we forecast, which is at a level of 196,000 such filings in fiscal year 1992, we would estimate that the surcharge would generate approximately $120 million in actual revenues.

Senator DECONCINI. So, about $25 million more?

Mr. HUTHER. Yes, sir.

Senator DECONCINI. Will that mean you will have a surplus?

Mr. HUTHER. It means that we would have a surplus insofar as the surcharge account is concerned.

Senator DECONCINI. Yes.

Mr. HUTHER. However, in our proposed legislation, that $25 million surplus, as you described it, would revert to what we call an offsetting collection, and that is a technical term of art. That is the type of fee that we have been collecting since fiscal year 1983 under the prior legislation. So what we would do is, in effect, keep the fees in place through fiscal year 1993 because, once again, the numbers of the surcharge grow in the out-years.

Senator DECONCINI. How are you coming along on your numbers now? Are you at that projected level that will come out as the number that you just mentioned?

Mr. HUTHER. Yes. We are running almost exactly on target to deliver the $91 million that we are obliged to under the 5-year omnibus bill.

Senator DECONCINI. Commissioner Manbeck, what is the philosophy in not continuing the small entity subsidy? Quite frankly, just to be very blunt about it, why not keep the same ratio that we had before, like you had in 1991, instead raising more from the small entities? I don't understand the philosophical part of that.

Mr. MANBECK. OK. Let me try, if I may, sir. The philosophy was that the subsidy as originally conceived was one which was to be borne by the taxpayer on the basis that the patent system confers benefits on the public as a whole as well as on the users of the Patent Office.

But when you come to where the users of the Patent Office are to pay everything, it did not seem fair to us, really, to tax the large users as heavily as they now are in 1991 in order to support the small user, given the level of income that we need to run the programs.

We considered a number of alternatives. First of all, we thought the ideal way to do this would be to have an economic means test, or at least one good way, and we worked very hard on that. An economic means test—not all small businessmen are poor people. A friend of my wife's arrived in his own Cessna 310 this weekend, flew on to Florida, and will be back. Now, I submit he doesn't need a Patent Office subsidy.

But we could not come up with a financially predictable way of doing a means test. We tried inventors by zip codes and everything else, and tax data, and just couldn't do it. So we tried to look at a way, again, to reduce the relative balance between the large user and the small user, but still give the small user entry to the system at a very reduced price, and that is how we came up the way we did.

Now, I will mention that about the same result could be produced by raising all the fees 10 percent.

Senator DECONCINI. Across the board?

Mr. MANBECK. Across the board.

Senator DECONCINI. What percent increase is this for the small entity, then?

Mr. MANBECK. Well, you have to say at what stage in time, I guess.

Senator DECONCINI. Well, across the board.

Mr. MANBECK. Across the board?

Senator DECONCINI. You don't raise it, as I understand it, on the filing fee or the issuing fee.

Mr. MANBECK. That is right.

Senator DECONCINI. You raise it on the maintenance, or whatever you call the fee, right?

Mr. MANBECK. Yes. Brad, do you have the numbers there?

Mr. HUTHER. Yes. The change in the small entity subsidy produces about $34 million in additional revenues on top of the amounts that are currently being paid.

Senator DECONCINI. OK. Is that a decrease, then, in $34 million on the large entities?

Mr. HUTHER. Yes.

Senator DECONCINI. It is?

Mr. HUTHER. Under the current arrangement, that is correct.

Senator DECONCINI. So you are really taking from the small ones and reducing the large ones?

Mr. MANBECK. Excuse me. It is not a decrease in the fees paid by the large—may we have the chart again, please? If we had known, we would have gotten lights for Vanna.

If you can see the numbers down there, sir, the large entities will be paying the same fees as before, and their costs, if our projections are right, will go up. They will pay the same level of fees and the amount of fees they pay will go up in 1992, not down.

Senator DECONCINI. But if you had kept the same percentage, their fees would have gone up?

Mr. MANBECK. More; yes, sir, and we can do that by a 10-percent across-the-board——

Senator DECONCINI. On everybody?

Mr. MANBECK. On everybody.

Senator DECONCINI. You know, it seemed to be working pretty well. At least, I didn't get any complaints from large patent filers, not one, but I got hundreds of letters from individuals and universities when the fees went up, and you must have had the same experience. It would seem to me that would certainly lead me to a feeling like, gee, maybe we should leave it like it is as to the percentages and let the large ones pay more.

There is an incentive for these small inventors, isn't there, that they have a lower fee than, say, IBM or GE and they can afford to pay it?

Mr. MANBECK. For those who can afford to pay, yes, I think that is true.

Senator DECONCINI. And then, of course, you run across your argument. What about those who can't afford it and they get in under the small entity? I don't know how you deal with that. You said you have struggled with that and couldn't come up with anything, and I don't have any better idea. I just hate to see something that has worked so well here—and we are getting so many complaints about it, and I am sure we will get more complaints now from the universities and small entities if you proceed with this budget than if you leave it like it was. We have already gotten the complaints once, I guess, Commissioner; I don't want them again. Do you?

Mr. MANBECK. Well, I like to live in peace with my fellow man. Senator, could I have just a second?

Senator DECONCINI. Sure.

[Pause.]

Mr. MANBECK. I have said 10 percent across the board would do the trick. We could go back and study that and give you our thoughts.

Senator DECONCINI. I would like to see it. I don't want to impose it on you because I don't know enough about it, to tell you the truth, and maybe I will get a little bit more knowledgeable and then really be dangerous to you. But it just seems to me like it worked pretty well and I hate to go back and see us go through this struggle again. I am trying to think of the public interest here more than anything else, and I have some trouble with that.

Mr. MANBECK. Well, I would like to emphasize, Senator DeConcini, that we are open to other—I mean, I speak for the agency and hope that we could get administration approval, but we are open, of course, to other alternatives. We would be glad to work with you and your staff.

Senator DECONCINI. Let me ask you one more question. On the large entities here in the 1992 piece of pie there, the circle, those are increased from $237.3 million to $267.3 million. What percent increase is that for the large ones? Does anybody know? Did they go up or is that a larger number of filings?

Mr. MANBECK. Larger number of filings.

Senator DECONCINI. So the fee didn't go up at all?

Mr. MANBECK. The fee did not go up at all.

Senator DECONCINI. So the only one that is going up is the small entities?

Mr. MANBECK. That is right. The question, I think, sir, is what is the judgment of the legislature.

Senator DECONCINI. Yes.

Mr. MANBECK. Should the large entities—and I think you have to be fair and say it is a tax.

Senator DECONCINI. It is a tax, no question about it.

Mr. MANBECK. At what level should they be taxed to support the small entities, recognizing the need to have an efficient, vital Patent Office, you know, for the rest of this century and going into the next century?

Senator DECONCINI. Well, you know, Commissioner, I have no quarrel with the way you run that Office. It is a well-run Office under some of the circumstances that I saw there that you have to live with, and I know you are automating and I think that is very important. I will give you some questions that you can answer over the weekend or whenever you have time on automation, or give to somebody else to answer, just to see how it is coming along.

I am just kind of philosophizing here, and maybe I shouldn't do that, but I just hate to see something that is working very well—now that we have gone through this horrible effort of totally funding through a user's fee tax, to hit the small entity once again troubles me, quite frankly. But if I have some magic, I will certainly share it with you.

Mr. MANBECK. All right, thank you. Of course, we will be glad to respond to any questions you or your staff may have.

Senator DECONCINI. I have no further questions now, although I will submit some for your office to respond to for the record.

Mr. MANBECK. Thank you.

Senator DECONCINI. Thank you very much.

[The prepared statement of Mr. Manbeck and additional material for the record follow:]

Statement of

HARRY F. MANBECK, JR.

ASSISTANT SECRETARY AND COMMISSIONER

OF PATENTS AND TRADEMARKS

Before the

SUBCOMMITTEE ON PATENTS, COPYRIGHTS

AND TRADEMARKS

COMMITTEE ON THE JUDICIARY

UNITED STATES SENATE

April 11, 1991

Mr. Chairman and Members of the Subcommittee:

Thank you for this opportunity to summarize our accomplishments over the last two years and to discuss our plans for the next several years, highlighting our authorization proposal for fiscal years 1992 and 1993.

Since our last oversight hearing, there have been several historic events for the U.S. Patent and Trademark Office. On March 19, 1991, we issued patent number 5,000,000. This patent, covering an invention relating to the manufacture of ethanol using man-made bacteria, was issued to Lonnie O. Ingram, Tyrrell Conway, and Flavio Alterthum, scientists working at the University of Florida. On this occasion, the Secretary of Commerce, Robert A. Mosbacher, stated "Patent No. 5,000,000 is an important milestone for the Patent and Trademark Office, and for the Nation. It comes at a time when the technological innovation encouraged by patent rights is critical to our international competitiveness. All Americans should make a renewed commitment to creativity in order to ensure that our country continues to grow and prosper."

Almost one year ago during the opening ceremonies of the bicentennial of the U.S. patent and copyright systems, Secretary Mosbacher announced the establishment of an Advisory Commission on Patent Law Reform. The purpose of the Commission is to advise the Secretary of Commerce on what, if any, changes are needed in the U.S. patent system. The Commission's membership includes executives of corporations which rely heavily on patents, members of the patent bar, academia, and the general public. I am pleased to report that the Commission held its first meeting on March 26, 1991, to select the topics it would consider and to determine its organizational and operating procedures.

Goals of the U.S. Patent and Trademark Office

The programs of the U.S. Patent and Trademark Office, in the past and in fiscal years 1992 and 1993, are based on a four-point plan. These points are:

1. To maintain the average time it takes to get a patent at 18 months, and to continue to improve the quality of issued patents.

2. To maintain the average time it takes to register a trademark at 13 months and to give the first opinion on registrability in three months;

3. To take aggressive steps toward automation of the Office in the 1990s; and

4. To strengthen the worldwide protection of intellectual property.

We have been successful in meeting the goals in the plan. In 1989, we achieved the 18-month pendency period for patent applications and maintained that period through fiscal year 1990. In 1985, we achieved the 13-month pendency period in trademarks and maintained it until the explosion of trademark application filings that followed the implementation of the Trademark Law Revision Act of 1988. In the 1990s, we are benefiting from the efforts that began in the 1980s to automate the Office. Also, we have supported legislation, considered by this Subcommittee, that was enacted and significantly improved our intellectual property laws. Finally, the U.S. Patent and Trademark Office worked diligently with the agencies responsible for trade and foreign relations on improving the level of intellectual property protection provided by other countries.

These successes have been made possible, in large part, by the stable funding base provided by our user fee system. This system was created by Public Law 97-247 and modified by successive authorization Acts and the Omnibus Budget Reconciliation Act of 1990.

Funding

In 1980 and 1982, the Congress and the Executive Branch recognized that the U.S. Patent and Trademark Office did not have the stable funding base it needed to provide the service necessary to maintain effective patent and trademark systems in the United States. Working together, they created a new funding regime, based on a mixture of user fees and taxpayer funds, that would be used to reduce the pendency periods for patent and trademark applications and to modernize the operations of the Office, particularly through automation.

This worked well through fiscal year 1990. However, the situation changed in fiscal year 1991. The Federal Government faced a fiscal crisis. Among other proposals, the participants in the Budget Summit recommended that the user fees charged by a number of Federal agencies, including the U.S. Patent and Trademark Office, be raised and that their taxpayer support be reduced. As a result, the Congress instructed the Committees on the Judiciary to reduce outlays of agencies for which they had oversight jurisdiction by $495,000,000 during fiscal years 1991 through 1995. To accomplish this, the Committees recommended that a 69 percent surcharge be applied to all patent fees established by subsections 41(a) and (b) of title 35. These fees include the application filing fees, issue fees, the fees for maintaining a patent in force, and several other fees. The revenues from this surcharge were to be placed in a Fee Surcharge Fund in the Treasury. These fee revenues, rather than taxpayer revenues, would be appropriated back to the U.S. Patent and Trademark Office. These recommendations were adopted and incorporated in the Omnibus Budget Reconciliation Act of 1990 (Pub. L. No. 101-508).

In the first year -- fiscal year 1991 -- under this Act, our program level is $351,427,000 and 4,765 positions. Of that amount $3,000,000 was appropriated from taxpayer revenues for core public functions and $88,000,000 was appropriated from the Fee Surcharge Fund. Congress made an additional $18,807,000 available without appropriation from the Fund. The remainder of the program, $241,620,000, will be financed through other user fees as has been the practice since fiscal year 1983.

For fiscal year 1992, the President requested a program level of $461,990,000 and 5,852 positions. To finance this program, he requested $3,300,000 from taxpayer revenues and $91,000,000 from the Fee Surcharge Fund to be appropriated. The remainder of our program, $367,690,000, will be funded through fee income and the revenues from the surcharge that exceed $95,000,000, the deficit reduction target. The increase between this year and last consists of initiatives to maintain pendency goals and to increase the quality of our services.

Patents

We achieved our patent pendency goal in 1989, when we reduced the pendency period for utility, plant, and reissue patents to 18.4 months.

In fiscal year 1990, we received a record 163,571 utility, plant, and reissue applications and 11,140 design patent applications. Even with an increase over fiscal year 1989, we maintained an average pendency time of 18.3 months, and we issued a record 89,551 utility, plant, and reissue patents and 7,176 design patents in fiscal year 1990.

This year we estimated that we would receive 179,000 utility, plant, and reissue patent applications. To date, we have received fewer applications than expected. We currently estimate that we will receive 165,000 to 170,000 applications. Because we are now substantially fully fee funded, we have taken steps to adjust our spending in response to this lower than estimated workload. Our goal, however, is still to maintain the 18-month pendency goal this year and next year.

To maintain our 18-month pendency period with increased patent application filings, the Office hired 503 patent examiners during fiscal year 1990. With examiner attritions, the number of examiner professionals (including design examiners and immediate supervisors) totaled 1,745 staff years at the end of the fiscal year. We now plan to hire 310 professionals and the necessary clerical staff to enable us to maintain our pendency goals in 1991.

Although our efforts have proven successful in the continued reduction of the average pendency time for utility patents, applications in the field of biotechnology have not fared as well. In fiscal year 1984, 3,756 applications were filed and the backlog was 6,557 applications. In contrast, 9,289 applications were filed in fiscal year 1990, and the backlog was 17,146 applications. The pendency period for biotechnology applications was 25.8 months at the end of fiscal year 1990, which is down from 27.0 months at the end of June, 1988.

To reduce the pendency period, we implemented a 13-point biotechnology catchup plan under which we created a patent examining group with responsibility for biotechnology to increase efficiency. We increased the number of biotechnology examiners to 138 by adding 52 new examiners in fiscal year 1990. Current plans for the next two fiscal years call for recruiting about 60 new biotechnology examiners each year to increase the size of the Group examining staff to nearly 200 examiners.

In fiscal year 1992, in addition to increasing the number of examiners, we are attempting to use other methods to reduce the backlog and to increase quality. We are trying to improve our retention rate by improving opportunities for higher pay including special pay rates for those in highly complex biotechnology areas. We plan to hire technologically trained staff to assist examiners by collecting information having a bearing on patentability prior to examination. We will be improving the examiners' ability to retrieve biotechnology literature by providing them with improved search tools and assistance from the National Institutes of Health and the National Library of Medicine. We have provided personal computers to all biotechnology examiners, and will increase their access to on-line technical and patent data bases.

Trademarks

We met our trademark pendency goal -- to give a first opinion on registrability in three months and to register a mark in 13 months -- in 1985 and maintained it through fiscal year 1989. In fiscal year 1990, however, the Trademark Law Revision Act took effect. On the date of implementation of the new law -- November 16, 1989, the trademark operation received more than 3,000 applications. Many of these were "intent-to-use" applications filed under the provisions of the new law. Though the initial increase in filing that occurred that day quickly subsided, filing rates remained high through the fiscal year and, by the year's end, we received a record 127,294 trademark applications. This was an increase of 53 percent over the prior year. The Trademark Examining Operation sent first actions on 92,612 applications in fiscal year 1990, compared to 79,382 in the prior fiscal year, and disposed of 93,565 applications, compared to 80,275 in fiscal year 1989. Even with these increases in production, the average time between the filing of an application and the Office's mailing of the trademark examining attorney's initial action on the application rose to 4.8 months, and the pendency period rose to 15.3 months at the end of fiscal year 1990.

This fiscal year, we expected to receive 132,000 trademark applications, given the filing rate in fiscal year 1990. Similar to our experience with patent application filing rates, the filing rate is lower than expected. We now estimate that we will receive between 115,000 and 120,000 applications. It should be noted, however, that this is still approximately 50 percent more applications than we received in fiscal year 1989.

To meet these increased demands, we plan to add 124 additional staff in 1991 and 96 positions in 1992 to reduce the pendency period and improve the quality of trademark services. With these additional resources, we expect to reach our pendency goals in fiscal year 1993.

Automation

In response to a requirement in Public Law 96-517, the Office prepared a study on automating all of its operations to increase efficiency and quality. In 1982, the Office committed itself to implementing the automation plan that resulted from the study.

After the Office developed an implementation plan for the Automated Patent System (APS), one aspect of our automation program, the Department of Commerce convened an Industry Review Panel to evaluate our progress, in response to concerns about the feasibility of our approach. In 1988, they concluded that APS was needed and that it offers "the potential for real benefits to the PTO and its development should be continued." They also identified significant implementation problems and recommended changes in the areas of APS design, determining requirements and testing, and program management.

We adopted their recommendations and, since then, we have made dramatic improvements. In their January 1990 report, the Panel noted that "The PTO has aggressively taken the key steps that can be done quickly and that bring the largest improvements; top management has acted more swiftly than is usual in such cases and is to be commended."

We have now gone beyond the "theoretical" and planning stages. The Automated Patent System is being put to work and is working. One part of this system, the full-text capability, allows examiners to search U.S. patent documents from 1971 to the present electronically using "word" searches. This system is now available to the public in our search facilities.

Another aspect of the Automated Patent System is the "image" data base. This system contains images of all U.S. patent documents including the patent drawings that are often necessary to understand the invention. The image data base was first approved for routine searching in one examining group in 1989. Its availability was extended to a second examining group in 1990. We continue to add drawings to the image data base to make it more useful and comprehensive. By the end of this year, we will have over 800,000 U.S. patents in the image data base -- one of the largest on-line image data bases in the world.

At first, many envisioned that electronic searching using the full-text and image data bases would be primarily limited to "classified" searches similar to those done with the paper files -- looking only at patents assigned to a specific technological category. It was thought that the greatest advantage of this data base would be its high level of file integrity -- something that could not be realistically achieved with the paper file. The full-text search capabilities were originally only considered

to be a valuable adjunct to the "classified" search. Continued experience, however, has shown that the full-text search systems may provide more capability than we originally anticipated. New search techniques using both the full-text and image search provide more pertinent information than the classified paper search or the electronic full-text and classified image searches used alone. And, we are exploring the possibilities for using artificial intelligence techniques -- such as "fuzzy logic" searches -- to enhance the examiners' ability to sort through large masses of data for patents that match conceptual criteria articulated by the examiner.

We have decided that it is advantageous to make this system available to more examiners. We plan to deploy the image system fully in a third examining group and to confirm the positive results obtained during deployment in the other two groups. We then plan to provide the APS image data base back to 1971 to all of the other examining groups and to the public.

The trademark search system, "T-Search", has been used by examiners since 1986 and has been available to the public in our search facilities since 1989. While it has been an extremely useful tool, trademark examiners and the public have expressed the desire for a better system -- one that is faster, has more powerful search techniques, and has more information available for retrieval. We have begun defining the features and performance needs for a new search system -- one that is faster, displays more usable data, and again incorporates artificial intelligence search tools. Also, we have recently moved the T-Search system to a more powerful mainframe, thereby achieving faster performance.

Disseminating the information in patent documents and providing a public register of trademark registrations have long been functions of the U.S. Patent and Trademark Office. Technological developments in the automation area have now provided new and improved methods of performing these functions and they have created a greater demand upon the Office to provide information.

To meet these demands, we will begin to provide on-line access on a pilot basis to the full-text search capability of the Automated Patent System to fourteen of our 70 Patent and Trademark Depository Libraries located throughout the Nation. If the pilot program is successful, this access will be expanded to all of these Libraries. As improvements to the full-text search system become available, we plan to provide them to these Libraries and to the public in the Public Search Room. Similarly, when feasible, the image data base will also be available to the public in these Libraries.

Compact disk technology (CD-ROM) has also expanded the possibilities for dissemination. Trademark information is now supplied to our Libraries in CD-ROM format. Some information on foreign patent documents is also being supplied to them. Later this year, we will begin to release new patent issues on CD-ROMs to the Libraries and the public. As the demands for patent and trademark information grows, we believe that CD-ROM technology offers the potential to disseminate the information we publish more quickly and less expensively.

International Activities

During the last several years, the United States Government conducted an unprecedented number of international activities designed to establish adequate international standards for intellectual property rights and to facilitate obtaining protection abroad. The U.S. Patent and Trademark Office participated in many of these activities at the request of the agencies responsible for foreign affairs and trade matters, including the Office of the United States Trade Representative, the Department of State, and the International Trade Administration of the Department of Commerce.

Perhaps the most well-known of these activities has been the Uruguay Round Multilateral Trade Negotiations held under the auspices of the General Agreement on Tariffs and Trade (GATT). We assisted the Office of the United States Trade Representative in the effort to reach an agreement on intellectual property, as part of the Negotiating Group on Trade-Related Aspects of Intellectual Property Rights, Including Trade in Counterfeit Goods (TRIPs Group).

The negotiations on all issues in the Uruguay Round were to be concluded at a meeting of trade ministers in Brussels, Belgium, during the week of December 3, 1990. Unfortunately, this meeting was adjourned without an agreement being reached, primarily due to the inability of the ministers to reach an agreement on agricultural issues. The Director General of the GATT, Mr. Arthur Dunkel, announced on February 26, 1991, that his consultations led him to believe that the Uruguay Round negotiations could be continued. As a result, the Trade Negotiating Committee adopted his proposal to continue the negotiations. The TRIPs Group met on March 18, 1991, but there was agreement that the pace of future meetings would depend on progress in other parts of the negotiations.

In addition to the negotiations in the Uruguay Round and perhaps of more immediate concern to the Subcommittee, negotiations are taking place within the World Intellectual Property Organization to harmonize the patent laws of its member states. The effort to harmonize patent laws began in 1984 with several meetings on the desirability of a grace period. These meetings were followed by

meetings of a committee of experts to develop a patent law harmonization treaty with the eighth and last being held in two parts in 1990.

The draft patent law harmonization treaty now under consideration consists of some 39 articles and some 13 rules. These articles and rules cover matters ranging from the details for naming an inventor in a patent application, to fundamental questions such as what types of inventions should be patentable and what should be the term and scope of protection provided by a patent.

Two proposals in the draft treaty are particularly controversial in the United States. The first would require that where two or more inventors apply for a patent for the same invention that the patent be granted to the first to file a patent application. The second would require that all patent applications be published 18 months after their earliest effective filing dates. As you know, the United States awards patents on a first-to-invent principle and has no mandatory publication prior to the grant of a patent. To avoid the conclusion of a treaty that may not be acceptable to the United States, we proposed that countries be given the option of granting patents on a first-to-file or first-to-invent basis, and be given the option to publish applications at 24 months instead of 18 months. These proposals, among others, will be discussed at the diplomatic conference on the treaty to be held in the Hague from June 3 to 28, 1991.

Legislation

This Session we plan to forward a number of legislative proposals and look forward to working with this Subcommittee on them. The Secretary of Commerce forwarded draft legislation on March 8, 1991, to make permanent the authority of the Secretary of Commerce to extend interim protection under the Semiconductor Chip Protection Act to nationals of foreign countries that he finds extend or are working to extend similar protection to U.S. nationals. The current authority is scheduled to expire on July 1, 1991.

We are also considering submission of a "house-keeping" bill for the U.S. Patent and Trademark Office. Under consideration are amendments in the patent and trademark laws to make minor adjustments and to improve the administration of these laws. These amendments include clarifying the term of renewal for expiring trademarks and correcting sections 18, 21(a)(4), 21(b)(1), and 24 of the Trademark Act of 1946. In addition, the amendments would clarify the conditions under which the Commissioner could revive abandoned patent and trademark applications, reinstate terminated reexamination proceedings, and accept the late payment of patent maintenance fees.

Authorization Legislation

The current authorization Act for the U.S. Patent and Trademark Office expires on September 30, 1991. During the consideration of the Omnibus Budget Reconciliation Act of 1990, the Committees on the Judiciary recognized that a new authorization bill would be considered this year, and added a provision to the Act that requires the Commissioner to study the fee structure of the U.S. Patent and Trademark Office and to submit a report with suggestions for changing the fee structure.

On March 4, 1991, the Secretary of Commerce forwarded draft authorization legislation to the Congress in response to the stated intent of the Congress to reauthorize the Office and to comply with the requirement for the submission of a report of the fee structure. This proposal would authorize the U.S. Patent and Trademark Office for fiscal years 1992 and 1993 in a manner that is consistent with the intent of the relevant provisions of the Omnibus Budget Reconciliation Act of 1990.

A "Statement of Purpose and Need" and a "Section-by-Section Analysis" were forwarded to the Subcommittee along with the Secretary's proposal. Instead of repeating the information in these documents, I will summarize the major components of the legislation.

Section 1 of the proposal would establish a two-year authorization and fee program, unlike the equivalent subsections of the prior authorization acts that created a three-year authorization and fee program. The proposed two-year program has several advantages. Most importantly, it would provide each Congress with the opportunity to review the authorization proposal of the U.S. Patent and Trademark Office. In addition, a two-year program would provide the Office with a greater level of precision in estimating its annual workload and budget needs than is possible with a three-year or longer authorization program.

For fiscal year 1992, section 1 authorizes appropriations of $98,300,000; and for fiscal year 1993, $102,300,000. Except for $3,300,000 in fiscal years 1992 and 1993, these amounts are not to be allocated from taxpayer revenues available to the Treasury. Rather, they are to be derived through appropriations from the Patent and Trademark Office Fee Surcharge Fund that receives revenues generated by the 69 percent surcharge placed on fees established by subsections 41(a) and (b) of title 35. Authorizations at this level are consistent with the deficit-reducing provisions of the Omnibus Budget Reconciliation Act. Additional revenues generated by the surcharge will be made available to the Office in the same manner as other fee revenues have been made available since fiscal year 1983.

During the coming two years, the patent-related fees enumerated in subsections 41(a) and (b) of title 35, United States Code, would remain at the present level. That is, the surcharge will not be increased and the fees subject to the surcharge will not be adjusted to reflect fluctuations in the Consumer Price Index. However, the proposal would give the Commissioner the authority to adjust other patent-related fees so that these fees coupled with the fees established under subsections 41(a) and (b) of title 35 and section 31 of the Trademark Act of 1946 will recover in the aggregate the operating costs of the Office. While the use of trademark fees would still be used primarily to underwrite the cost of the trademark operations, the proposal would also permit trademark fees to be used to fund related activities in the administrative, legislative, international, and outreach program areas. These areas were previously funded from taxpayer revenues that are no longer available. Furthermore, the proposal specifies that trademark fee revenues may only be used for other authorized activities of the Office if the conditions for reprogramming of funds specified in the annual Department of Commerce appropriation act are satisfied.

No direct fees would be established for the use of the paper files. The costs of maintaining these files will be underwritten by other fee income and we will continue to charge reasonable fees for public access to the automated search systems.

Subsection 4(d) would amend subsection 41(h)(1) of title 35 to strike a more appropriate balance between the fees paid by large entities and the fees paid by small entities. Under the Omnibus Budget Reconciliation Act of 1990, the Patent and Trademark Office will be supported almost exclusively by the fees paid by users of the patent and trademark systems. The Office will not receive taxpayer revenues to fund the 50 percent subsidy, $50,351,000 in fiscal year 1991, currently enjoyed by small entities for all fees established by subsections 41(a) and (b). In the absence of any taxpayer revenues, the funds for underwriting any continued subsidy must be obtained by charging higher fees to other users of the patent system. Since more than one-third of the total number of patent applicants presently qualify for such small entity status, both fairness and the need to preserve the incentives of the patent system dictate a redistribution of the responsibility large and small entities bear for supporting the cost of the system. Thus, the subsidy for small entities is limited under this subsection to the fees paid for filing patent applications for original patents, design patents, plant patents, and reissue patents, but the subsidy would remain at the 50 percent level. Small entities would also enjoy the 50 percent subsidy for fees paid on filing for excess claims and multiple dependent claims. This will enable small entities to enter the patent system with the same relative advantage they enjoy today and to decide whether to pay full fees for obtaining patent issuance only when they are in a position to

make an informed judgment about the scope of protection and the commercial value they are likely to receive.

This proposal, if enacted, will take effect on October 1, 1991. The new fees established under the provisions of section 4 of this proposal would apply to all payments made on or after October 1, 1991. Fees that are paid before October 1, 1991, will be accepted if they satisfy the requirements of law prior to that date.

We urge the Subcommittee to act upon this proposal as soon as possible. The President's appropriation request and this authorization proposal are inextricably linked. The appropriations request is scheduled to be acted upon by the House of Representatives by June 30, 1991. Furthermore, we must publish final rules implementing the provisions of any authorization legislation no later than August 1, 1991. Finally, we would like to be able to notify our users as soon as possible about any changes in our fee structure.

GENERAL COUNSEL OF THE
UNITED STATES DEPARTMENT OF COMMERCE
Washington, D.C. 20230

JUN 14 1991

Honorable Dennis DeConcini
Chairman, Subcommittee on Patents,
Copyrights and Trademarks
Committee on the Judiciary
United States Senate
Washington, D.C. 20510

Dear Mr. Chairman:

Enclosed are responses to your questions submitted to the U.S. Patent and Trademark Office for inclusion in the record of the authorization hearing held on April 11, 1991. We welcome this opportunity to augment the record to support ensuring an adequate funding base for the U.S. Patent and Trademark Office.

Sincerely,

Wendell L. Willkie, II

Enclosure

RESPONSES TO QUESTIONS SUBMITTED BY

SENATOR DECONCINI

Question 1: You have asked for around a 142 million dollar increase, that's 32%, in your budget for FY 1992. The idea behind last year's Budget Agreement was to cut spending. The fact that the cost of running the Patent Office was shifted from the public to the inventor does not lessen the need to cut costs.

a. In light of this, how do you justify a 32% increase in this year's budget?

b. Please explain the operational effect on the Patent Office if the increase in your budget was limited to 16% for FY 1992? 8%?

c. Please describe the areas in which you have cut or examined cutting costs since the Budget agreement?

Answer:

1a. The total budget increase for the U.S. Patent and Trademark Office (USPTO) is $110,563,000 which is a 31.4 percent increase over our fiscal year 1991 enacted budget. This increase can be categorized as follows:

Costs Related To	Amount
Inflation (e.g., pay raises, rent increases, etc.)	$29,533,000
Workload increases	$45,428,000
Automation expansion	$18,403,000
Priority quality and other improvements	$17,199,000
TOTAL	$110,563,000

Two-thirds of the planned increase -- costs related to inflation and workload increases -- will only cover the costs of maintaining our 1991 level of service. The remainder of this increase -- less than $36,000,000 -- will enable the USPTO to provide improved services to inventors and industry, e.g., higher quality examination, reduced biotechnology pendency, better dissemination of patent and trademark information to the public, and automation of our outmoded, paper-oriented and labor-intensive operations. These priority improvements represent a modest increase of approximately 10 percent over the enacted fiscal year 1991 program budget of $351,227,000.

1b. If our budget increase was limited to eight (8) percent, we would not even keep up with inflation. The number of patent and trademark applications awaiting examination will increase dramatically. As a result, the time to process patent and trademark applications would increase, especially in the biotechnology area. Enhancement of our automated systems would be delayed. Finally, many other improvements such as increased use of CD-ROM technology would also be temporarily delayed.

If our budget increase was limited to sixteen (16) percent, we would be able to keep pace with inflation, but we would only be able to process half of the expected increase in applications filed. Accordingly, backlogs would grow. As would be the case if our increase was limited to eight percent, automation enhancements and quality improvements would be delayed during this authorization period.

1c. We believe that the proposed budget for fiscal year 1992 represents the minimum amount, given current workload estimates, that must be spent to provide services at an adequate level. Therefore, we have not proposed any cuts to it.

Question 2: While patent applications are increasing at a rate of 9.5% per year, the Patent Office is requesting a 32% increase in spending. Why are your costs rising so much faster than your workload?

Answer: The increase in the number of patent applications expected is only an example of the increased requests for services that we are receiving. The proposed increase to meet all of these requests is only 12.9 percent of the program for fiscal year 1991. An increase of 8.4 percent over the 1991 program is requested to cover the cost of inflation. The remainder of the proposed increase -- 10.1 percent of the 1991 program -- is to invest in improvements for the future.

Question 3: Has your Office found any evidence that the 69% surcharge on patent fees decreased patent filings?

Answer: No. While the number of patent applications filed so far in fiscal year 1991 has been less than we anticipated, the number of applications filed in the first six-months of fiscal year 1991 is greater than the number filed in the first six-months in fiscal year 1990. More importantly, there are no significant changes in the mixture of U.S. and foreign applicants, or the mixture of large and small entities.

Question 4: The Budget Agreement Act requires the Patent Office to save 95 million dollars for FY 1992 through the 69% surcharge. How much money will the 69% surcharge actually generate in FY 1992?

Answer: The 69% surcharge is currently estimated to generate approximately $120,000,000 in fiscal year 1992. Actual surcharge collections could be higher or lower, depending on the volume of work we receive in each of the 25 separate fee categories subject to the surcharge. Our estimate assumes that 196,000 patent applications will be filed in fiscal year 1992, but this estimate may change during the course of the year.

Question 5: What authority does Congress have over additional revenue generated through the 69% surcharge?

Answer: The Congress has the authority to control the use of funds generated by the surcharge, even those in excess of the deficit reduction targets. Under section 10101(b)(2)(B) of the Omnibus Budget Reconciliation Act of 1990, all amounts generated by the surcharge "shall be available only to the Patent and Trademark Office, to the extent provided in appropriation Acts ...." Thus, all revenues from the surcharge in fiscal years 1992 through 1995 must be authorized and appropriated under current law.

Question 6: You state in your testimony that much of your budget increase request will be spent on maintaining patent pendency goals. Some of the patent groups testified at the hearing that a low patent pendency period should not be such a high priority. Would a patent pendency goal of 22 months reduce costs at the Patent Office? Wouldn't that still be lower than the European Community's and Japan's patent pendency period?

Answer: Allowing the pendency period to increase to a specified period, such as 22 months, does not result in any significant long-term savings. Increasing pendency would mean increasing the time before the examiner initiates action on an application. It does not affect the time it takes the examiner to review the application once he initiates action. During the transition period from 18 to 22 months pendency period, we would save some resources because we would defer hiring additional staff to maintain the lower pendency period. After the pendency rises to 22 months, however, we would have to employ the same number of staff to maintain the pendency level at 22 months as we would have to maintain it at 18 months. Thus, we would only save resources during the transition period, but we lose the benefits of the 18-month pendency period.

At this time, a 22-month pendency period would be shorter than the pendency periods in the European Patent Office and the Japanese Patent Office.

Question 7: What was the increase in your Standard Level User Charge to GSA in 1990? 1991? 1992?

Answer: The actual and estimated Standard Level User Charges (SLUC), i.e., rent, paid to GSA from fiscal years 1989 to 1992 are as follows:

	Amount		Increase	
FY 1989	$ 20,573,000	actual		
FY 1990	22,126,000	actual	+$ 1,553,000	
FY 1991	29,498,000	estimated	+ 7,372,000	
FY 1992	46,940,000	estimated	+ 17,442,000	1/

1/ This increase is composed of a rent increase of +$12,092,000 and an increase for an additional 165,000 square feet of space at a cost of $5,350,000 to address workload requirements. Referring to Answer 1(a), the $12 million SLUC increase represents more than 40% of the increased costs caused by inflation.

Question 8: Have you talked to GSA about purchasing buildings instead of leasing?

Answer: Yes. We are discussing our space requirements for 1996 and beyond with GSA. One option under consideration is the purchase of buildings for the Office.

Question 9: How much additional space will the Patent Office need in Fiscal Year 1992?

Answer: The Office requested 165,767 square feet of additional space in fiscal year 1992. This amount was calculated by multiplying the amount of space approved for an individual by the number of planned hires for fiscal year 1992.

Question 10: What role, if any, does the Patent Office have in the licensing of federal agency patents? How many federal agency patent filings were there in 1989? In 1990? How much revenue did this generate for the Patent Office in each year?

Answer: The U.S. Patent and Trademark Office has no role in the licensing of patents owned by Federal agencies. The majority of all Government patent licensing is performed by the National Technical Information Service (NTIS). NTIS acts on behalf of all Government laboratories except those of the Department of

Defense, the Department of Energy, and the National Aeronautics and Space Administration.

The U.S. Patent and Trademark Office does not separately identify applications received from Federal agencies until the application is prepared for issue. As a result, we do not know the precise number of applications filed by Federal agencies. We did, however, issue 836 patents to Federal agencies in fiscal year 1989, and 810 patents to them in fiscal year 1990. In addition, we published 96 and 79 Statutory Invention Registrations in fiscal years 1989 and 1990, respectively.

We do not separately monitor income from fees paid by Government agencies for services that we provide. We estimate, however, that fees paid by Government agencies exceeded $800,000 in each of fiscal years 1989 and 1990.

Question 11: In his State of the Union Address, President Bush spoke of the need to support Small Businesses and he requested a funding increase to revitalize the Small Business Administration. Doesn't this favorable view towards small business conflict with the Administration's recommendation to eliminate the patent fee differential for small businesses?

Answer: We could not identify any statement in the President's State of the Union Address or in the Fact Sheet that accompanied the Address that specifically identified proposals regarding the Small Business Administration. If you could identify any such statements for us, we would be pleased to provide further information.

In addition, we do not propose to eliminate the subsidy for all fees. We propose to limit the subsidy to the fees paid for filing patent applications, and that subsidy would remain at the 50 percent level. This would enable small entities to enter the patent system with the same relative advantage they enjoy today and to decide whether to pay full fees for obtaining patent issuance only when they are in a position to make an informed judgment about the scope of protection and the commercial value they are likely to receive.

Question 12: In your summary, you mentioned that you had considered various alternatives for modifying the small entity subsidy. Could you describe the various alternative scenarios you explored for modifying the small entity subsidy and why these alternatives were not proposed by the Administration?

Answer: The U.S. Patent and Trademark Office considered seven basic alternatives for modifying the small entity subsidy. These alternatives are listed below:

1. Maintain the 50 percent small entity subsidy in its current form.

2. Maintain the 50 percent subsidy for subsection 41(a) fees (filing, claim, issue, and some other fees), but discontinue the subsidy for 41(b) fees (maintenance fees).

3. Maintain the 50 percent subsidy for filing fees, claim fees, and issue fees, but discontinue the subsidy for all other fees.

4. Provide a 50 percent subsidy for filing fees and claim fees only.

5. Maintain the 50 percent subsidy for all subsection 41(a) and (b) fees, but provide this subsidy to independent inventors only.

6. Reduce the subsidy discount on all subsection 41(a) and (b) fees to 25 percent.

7. Eliminate the small entity subsidy entirely.

Alternatives 1, 2, 3, 5, and 6 were rejected primarily because they would have required large entities, which account for about 65 percent of the Office's patent workload, to pay a disproportionally high -- 82 percent -- share of the costs of the patent operation.

Alternative 7 would allow the Office to reduce statutory fees for large entities by approximately five percent, because current fee rates would produce too much income if the subsidy was eliminated. Under this scenario, the application filing fee would drop from $630 to $590, and small entities would have to pay the same fees as the large entities. This alternative was rejected because it may tend to discourage small entity inventors from filing patent applications.

Alternative 4 was considered to be the most equitable because it recovers the Office's estimated program costs and it provides an incentive to small entities to file patent applications without placing an excessive burden on large entities inventors. Under this scenario, large entities would pay about 75 percent of the costs of our patent operations -- seven percent less than today but 10 percent more than their proportional share. Moreover, statutory patent fees raised on November 5, 1990, would remain constant. Therefore, this alternative was proposed.

In addition, we considered recommending the adoption of a "means" test. Under such an approach, the subsidy would only be granted to those who demonstrated an "economic need" for it. We

abandoned this approach because we could not develop a clear and workable definition of economic need that would have predictable consequences.

Question 13: Did you consider providing the small entity exemption only to inventions made in the United States? How much revenue would this generate? Would this proposal violate any international patent treaties of which we are signatories? Do we already violate international patent treaties in our current law (e.g., 35 U.S.C. §104)?

Answer: We did not give extensive consideration to the option of limiting the small entity subsidy to applications claiming inventions made in the United States. In our view, adoption of this option would set an international precedent for establishing different fee schedules based on nationality or place of invention.

We cannot accurately predict additional revenue generated by this proposal because we have no information on the place of invention. We estimate, however, that additional payments from such small entities, who would no longer be entitled to the subsidy, would be less than $12,000,000 if this proposal were enacted for fiscal year 1991.

Strictly interpreted, Article 2 of the Paris Convention for the Protection of Industrial Property does not preclude implementation of such a proposal because the proposal is based on the place of invention, not the nationality of the inventor. It is certain that other countries would view enactment of such a proposal as a violation of the spirit of Article 2 and that such a fee schedule might provoke similar retaliatory measures aimed at U.S. inventors filing abroad.

We do not believe that section 104 or any other section of title 35 of the United States Code violates Article 2 of the Convention. Moreover, there are valid policy reasons for section 104 which relate to the absence of effective discovery in most other countries of the world.

Question 14: What percentage of your budget in 1992 will go to the automation system?

Answer: In fiscal year 1992, the Office budget for automation is $87,400,000, or 18.9 percent of the total budget request. Of this, $57,400,000 will be spent on the Automated Patent System, or 12.4 percent of the Office's total request.

Question 15: How much of an increase over 1991 are you asking in your budget for the cost of the automation system?

Answer: In fiscal year 1992, the Office requests an $18,403,000 increase over its fiscal year 1991 total automation budget. This does not include adjustments to compensate for inflation.

Question 16: Why can't the Patent Office spread the costs of the automation system over more years?

Answer: The current cost and schedule is an attempt to bring the benefits of the automation system (higher quality, improved public access to an electronic data base with U.S. and foreign patent documents, long-term cost savings, etc.) to the most users (patent examiners and the public) in the shortest length of time. Delay in deploying the system will add to the total costs of deployment, continue our reliance on inadequate and inefficient paper files, delay expected quality enhancements from automated searching techniques, and delay providing access to the public, including much-needed foreign patent documents and CD-ROM products. However, the costs of the automation system could be spread over more years with these consequences.

Question 17: In what year will the system be fully automated -- that is, when will it be fully loaded with text and image information and be used by all examiners and available in depositories? At that time, how much will we have spent on the automation system from beginning to end?

Answer: The full text data base containing the text of all U.S. patents issued since 1975 became available to all patent examiners in 1986, and is considered to be fully loaded. Access by the public is presently provided in our public search room, and will be extended to 14 depository libraries later this year. We plan to deploy the text data base to all depository libraries, which currently number 70, during fiscal year 1992.

The most recent twenty years of U.S patent images will be available to examiners and local public users in 1993. The complete data base of all U.S. patent images will be available in 1994. For all practical purposes, the patent automated searching system will be complete by fiscal year 1996 when all foreign data bases will be accessible.

The fully operational trademark search system, "T-Search", has been available to all trademark examiners since 1986 and has been available to the public in our search facilities since 1989. We have, however, begun defining the features and performance needs

for a new trademark search system -- one that is faster and displays more data.

The original Automation Master Plan submitted to the Congress in December 1982 projected uninflated "estimated high cost base" (p. 8-8) costs for the period fiscal year 1983 through fiscal year 1996 of $630,000,000. Using a compounded rate of five percent, the 1983 cost adjusted for inflation or expressed in current dollars becomes $899,000,000. Our fiscal year 1992 Congressional Budget Submission reflects costs for the corresponding period (fiscal year 1983 - fiscal year 1996) to be $953,000,000, representing a six percent expected cost overrun.

Question 18: When the automation system was first started in 1982, what was the estimated date of completion?

Answer: In 1982, the Office anticipated a twenty-year system life, ending in 2002. Of that period, we anticipated a ten-year development period ending in 1992, followed by a ten-year maintenance period. The goal was to achieve full automation by 1990, which goal was achieved in trademarks in 1986 and for management and administrative systems in 1988. While portions of the Automated Patent System (e.g., full-text searching, direct access to commercial data bases, acquiring the Japanese and European data bases, etc.) have been deployed, this system will not be "complete" until 1996 when electronic filing and foreign data bases are available.

Question 19: What percentage of the examiners are using the system completely, today?

Answer: At present, only two examining Groups -- Groups 210 and 220 -- and part of Group 230, have "complete" access to APS, that is, access to both the text search system and the image search system. As of March 1991, these Groups had 268 trained users. Thus, with an examining corps of 1848 examiners, fifteen (15) percent of the examiners used APS completely.

All trademark examiners use T-Search.

Question 20: How much will that figure exceed the original projected cost of the system?

Answer: In current dollars, the projected overrun cost of our entire automation program is $54,000,000, or six percent, more than estimated in 1982.

Question 21: Over the years the Patent Office has reduced the period between the filing and the issuing of a patent pendency to an average of 18 months. How much of this reduction can be attributed to the automation system?

Answer: The recent reduction in the average pendency period cannot be attributed to use of automated systems. The purpose of the Automated Patent System (APS) is to replace the paper search files of the Patent and Trademark Office. Combined, the examiner search files and the public search files currently hold over 45 million documents and are growing at a rate of nearly one million U.S. and foreign documents each year. They are rapidly becoming unmanageable and, for some time, have been plagued by chronic lack of integrity (patents missing from the file) which can adversely impact the quality of issued patents. The APS is intended to overcome these problems and, at the same time, enrich the search resources available to the examiners in ways only possible in an automated system. The net effects are cost savings and examining quality enhancement.

Question 22: Why does each examiner have access to the entire automated data base? Instead, shouldn't an examiner need only access to patents in his or her subject area? Would this be more cost efficient?

Answer: We propose to give each examiner access to the entire data base because often the essence of an invention for which patent protection is sought is the combination of techniques and components from diverse areas of technology. Consequently, examiners often must have access to technological information outside of their primary area of responsibility. Based on an analysis of time usage by examiners in Group 220, approximately 11 percent of the examiner's search time is spent in searching applications outside the examiner's art area.

Two good examples of this phenomenon are in the fields of robotics and numerically controlled chemical processes. Robotic devices typically comprise a vision system, an onboard computer, various types of motors, mechanical components, hydraulics, and electronics. Also, many industrial chemical processes, such as vulcanizing rubber, involve the use of numerically controlled equipment to operate machines such as ovens in precise ways to react chemicals and other materials to form improved products.

To create "compartmentalized" data bases for each examiner or for groups of examiners would be less cost-effective than the centralized, maximum flexibility approach incorporated in the current design of APS.

Question 23: Patent and trademark operations serve two very different intellectual property constituents with very different needs. Why should user fees submitted for one type of service be used for another?

Answer: Patent-related fee income should not be used to finance trademark operations and vice versa except under emergency situations such as described in the answer to Question 24.

Question 24: In what sort of situation would you see the need to reprogram funds? How would you prevent trademark users fees being increased to make up for shortfalls in patent expenditures?

Answer: We would envision using the reprogramming mechanism proposed in the legislation only under emergency situations. For example, if patent fee income were to suddenly and precipitously plummet, trademark funds could be used to pay examiner salaries while an orderly reduction to patent staff took place. Of course, patent fees could also be used to cover a similar emergency situation in trademarks.

We have no intention of ever including non-trademark processing costs in calculating trademark fee adjustments. We have not done so in the past; we will not do so in the future. We will continue to provide quarterly reports on expenditures so that the trademark community will continue to be aware of the application of trademark revenues to our costs. Additionally, in the annual report to the Congress, all of our spending is compared by showing actual fee expenditures in relation to the Congressionally enacted budget plan.

Question 25: Recently, I introduced S. 654, the Biotechnology Protection Act of 1991. I have sent you a letter with suggested changes in the language. I look forward to your comments. I understand that you testified in support of Congressman Boucher's bill with the same language in the House last year. Does the Administration still support this legislation?

Answer: In its letter of June 10, 1991, the Administration fully supported the concept underlying S. 654. In addition, the letter proposed changes in the wording of the legislation to clarify the circumstances under which claims to a process of making or using a patentable product and claims to that product could appear either in the same patent or in different patents.

Question 26: What efficiencies would occur in the Patent Office if we were to enact S. 654? Would clear rules for obtaining patents help reduce the backlog of biotechnology patent applications?

Answer: S. 654 addresses situations where the invention sought to be patented involves a product that meets all the criteria for patentability and one or more processes of making and/or using that product. If S. 654 were enacted and assuming applicants did not argue patentability of the process claims independently of the patentable product and several other factors, several efficiencies could occur in the Office. First, S. 654 would create a rule that when certain conditions exist, a process would meet one of the statutory criteria for patentability (i.e., nonobviousness). This rule would eliminate an often contentious issue that develops during examination, and would thereby make the examination process more efficient and less costly for both the Office and the applicant. Second, because S. 654 would link the patentability of a process and a product, examiners would likely make fewer requirements for an applicant to file separate patent applications on the product and the processes of making and/or using that product. This could reduce the work of the Office because fewer applications would be filed to obtain the same scope of protection (i.e., both product and process aspects of the invention). Finally, patent protection on both the product and process aspects of an invention is likely to be granted in a shorter period of time than at present because the examination process would be more efficient. While enactment of legislation along the lines of S. 654 would simplify certain aspects of our examination practice, we believe that it would not have a significant impact on reducing the backlog of applications in the biotechnology area or any other area because of the limited amount of applications to which, in our opinion, it will apply.

Question 27: Recently, Senator Hatch and I reintroduced the Patent Remedy Clarification Act, S. 758. We have also introduced the Trademark Clarification Act, S. 759. Would you please share with the Subcommittee your views on these bills?

Answer: S. 758, the Patent and Plant Variety Protection Remedy Clarification Act, would amend the U.S. patent law and the Plant Variety Protection Act to make it clear that States and their officers may be sued in Federal court for damages arising out of infringements of patents and certificates of plant variety protection. S. 2193, the predecessor bill in the last Congress, did not extend its provisions to the Plant Variety Protection Act. The Department of Commerce testified in favor of its companion bill, H.R. 3886, in the last Congress before the House Judiciary Subcommittee on Courts, Intellectual Property and the Administration of Justice. We noted that a major purpose of the patent system is to encourage innovation, and to provide inventors with reasonable compensation for their inventions. Although Congress has granted the Federal courts exclusive jurisdiction over patent cases, patent holders would be forced to

pursue uncertain remedies under State law if States remain immune from suit for patent infringement. Accordingly, the concept of S. 758 is clearly in the interest of a strong and effective patent system.

S. 759, the Trademark Remedy Clarification Act, would make clear that the concept expressed in S. 758 with respect to patents and plant variety certificates would also extend to trademarks. The Federal copyright laws were amended during the last Congress to abrogate Eleventh Amendment protection to States with respect to copyright infringement. If a bill along the lines of S. 758 is enacted to extend this concept also to patents and plant variety certificates, failure to amend the Trademark Act in a similar manner may be interpreted as an intention by Congress to maintain State immunity in Federal trademark actions.

Question 28: Under our patent system, over the 17-year life of a patent, a patent owner must pay maintenance fees at three separate times. Would a yearly maintenance fee be more efficient? How do the European Community and Japan operate their maintenance fees?

Answer: We do not believe that yearly maintenance fees would be more efficient. If we charged yearly maintenance fees, the costs of processing maintenance fee collections would increase dramatically, perhaps even quadruple. This administrative cost would have to be borne by users of the patent system. We believe that, at the present, any advantages there may be with yearly maintenance fees are outweighed by the cost of collecting them.

The European Patent Office, and the industrial property offices of its member states, and the Japanese Patent Office have yearly maintenance fees.

Question 29: Please describe any efforts by the Patent Office to enable inventors to comment or advise you on Office policy and administration. Do you have advisory boards composed of inventors? If so, describe the authority of these boards.

Answer: In accordance with the Administrative Procedures Act and the patent laws, the U.S. Patent and Trademark Office publishes in the Federal Register and the Official Gazette proposed rules, including fees, for notice and comment. All members of the public, including individual inventors, are invited to comment, and their comments are considered carefully during the rulemaking process. In addition, we consider all constructive suggestions, regardless of their source, for improving our procedures. In this regard, officials from our Office solicit comments and ideas from our customers on aspects of our operations including the

public search rooms, assignment processing, and our Patent and Trademark Depository Libraries.

At present, we have only one patent advisory committee, the Advisory Commission on Patent Law Reform, established by the Secretary of Commerce, Robert A. Mosbacher. The purpose of this Commission is to review the operation of the patent laws and to suggest any needed reforms. Members of the Commission are drawn from industry, academia, the patent bar, the antitrust bar, the small business community, and the public. We believe that the interests of inventors will be adequately represented by the distinguished members of the Commission.

Question 30: In their testimony, AIPLA claims that the Patent Office plans to increase section 41(d) fees by 175 percent. Is there any truth to this assertion? What is your position on their proposal to add a 38% surcharge instead?

Answer: If S. 793 is enacted, we propose to increase subsection 41(d) fees by an average of 175 percent. Some specific fees, however, would be increased less than 175 percent, while others may be increased more than 175 percent. Even with these increases, we believe that the cost of these services is below fair market value.

We oppose the imposition of a 38 percent surcharge because it would not generate the necessary revenue.

Question 31: I have received a large amount of correspondence from computer programmers throughout the country who are concerned with the potential problems that could arise from patenting of computer software. They assert that the Patent Office has insufficient prior art on file to determine whether a software application is truly novel and nonobvious. What is your response to their concerns?

Answer: Inventions that are merely computer programs, mathematical algorithms, and scientific principles are not patentable subject matter. Thus, we will not issue patents covering them. The U.S. Patent and Trademark Office must grant patents on inventions involving steps performed by computers if these inventions meet the statutory criteria for utility, novelty, and nonobviousness, as well as other requirements. To determine whether or not an invention is novel and nonobvious, we must compare the claimed invention with the prior art. Our major sources of evidence of the prior art are issued U.S. patents, foreign patent documents, and technical publications.

Many U.S. patents related to computer technology are located in Class 364 entitled "Electrical Computers and Data Processing

Systems." To make our search of the prior art "more searchable", we are in the midst of reclassifying Class 364 into a new class entitled "Information Processing System Organization." A special computer information retrieval system called CASPIR is available and is used to search for technological concepts in the subclasses involved in the reclassification effort. Examiners may also avail themselves of the Automated Patent System search data base called USPAT. In addition to patent databases, relevant technical journals are subscribed to and routed to the examiners while extensive use of commercial databases such as Dialogue are utilized to access and retrieve substantial amounts of non-patent literature.

Unfortunately, much of what is known by those skilled in programming is embodied in actual code which is in public use, but which is not available as published or documented material in the usual sense of the word. Acquisition of a vast collection of computer program listings would not provide an efficient basis for determining patentability since we search for the process for which patent protection is requested rather than the manner in which the process is executed in a particular computer. A collection of such documentation in a systematic, indexed format would provide a useful search tool for the examiner. However, we know of no collection of this type and do not know whether one could be designed or developed. We have asked for the assistance of the relevant industry and bar associations in collecting this type of documentation, as well as other types of documentation that could assist in our examination process. Currently, we are working with representatives from the intellectual property and information retrieval communities.

RESPONSES TO QUESTIONS SUBMITTED BY

SENATOR BIDEN

Question 1: In your opening statement, you noted Secretary Mosbacher's call for all Americans to make a renewed commitment to creativity in order to improve future economic conditions in our country. What role do you see the Patent and Trademark Office as having in helping to foster creative influences in American industry?

Answer: The U.S. Patent and Trademark Office fosters innovation by issuing patents on those inventions meeting the statutory criteria and by disseminating the technical information contained in patent documents.

The U.S. patent system encourages inventors by providing the possibility for recognition and economic reward for their contributions to technological development. Similarly, the patent system provides assurances to those who invest in innovation. During the next authorization cycle, the U.S. Patent and Trademark Office plans to maintain the average pendency period at 18 months and to reduce the pendency period in the biotechnology area. This means that inventors and investors will receive a prompt determination on patentability and will be able to benefit from their efforts within a reasonable time. Also, we plan to increase the quality of the patents that we issue. This means that inventors and investors will be able to place more reliance on the patents that we issue.

Patent documents contain valuable information on the state of technology, much of which is not readily available in other technical publications. By using this information, scientists and engineers can ascertain solutions to technical problems without having to duplicate the research of others, and they develop new and more efficient methods based on the patent disclosures of others. Over the last decade, the U.S. Patent and Trademark Office has encouraged the dissemination and use of information in patent documents. We have increased the number of Patent and Trademark Depository Libraries, provided more information in electronically readable form, provided public access to some automated search systems, and explored the use of new technological developments such as CD-ROMs as a means of disseminating information. During the next authorization cycle, we will expand our efforts by improving access by the public to patent information in the Patent and Trademark Depository Libraries, in our search facilities, and in the products that we sell to the public.

Question 2: Last year, Congress and the Administration required that the Patent and Trademark Office establish fees that will recover its operating expenses. It is my understanding that patent fees in Japan and Germany provide an excess of funds to cover patenting operations in those countries.

Could you provide the Subcommittee with a comparison of fees charged by Japan, Germany and the European Community with those charged by the United States? Could you also break down that information into its various components, application filing fee, issue fee, maintenance fee, etc.

Could you also provide the Subcommittee with information on the revenues patent and trademark fees provide to Japan, Germany and the European Community that are in excess of the costs of those programs. To the extent possible, could you also tell us where those excess revenues are deposited?

Answer: The procedures for filing, examining, issuing, and maintaining a patent vary from country to country. Therefore, it is necessary to oversimplify and to make certain assumptions about the fee structures to compare them in any meaningful fashion. For example, Japan has an examination fee, but does not have an issue fee. Germany has filing, search, examination, and issue fees. Therefore, we have combined a representative sample of the fees that must be paid through the filing and issue process and combined all of the maintenance fees due after the patent has issued. We have attached Chart I, used during our testimony, that compares patent fees in several countries. [The data represents fees in effect on January 3, 1991, at the exchange rates on January 3, 1991.] The data depicted in the Chart follows:

Comparison of Patent Fees
(In U.S. Dollars)

	Filing/Issue	Maintenance	Total
U.S. Small Entity	840	2500	3340
U.S. Large Entity	1680	5000	6680
Germany	1020	14384	15404
Japan	1372	18240	19612
EPO*	6021	43067	49088

* Assumes the applicant designates France, Germany, Italy, The Netherlands, and the United Kingdom.

The financing systems used by other industrial property offices also vary, and we only have limited information about them. We have, however, attached several pages from the latest report of the European Patent Office (1988) and the German Patent Office (1989) regarding their finances and income in excess of expenses. The Japanese Patent Office does not publish information on the income generated from the fees that they charge. We will endeavor to obtain additional information on these matters.

Question 3: The Patent and Trademark Office currently operates 70 depository libraries for patent and trademark information across the country. In your statement you also highlighted efforts to improve the automation system and make patent information more readily available.

Has the PTO ever given consideration to moving beyond simply providing information to more actively helping companies develop the information that can lead to patentable ideas? Laboratories or research centers that could help companies use existing patented ideas develop new ones, for example?

Answer: In recent years, we have not considered helping companies develop patentable inventions. First, our expertise is in examining patent applications to determine if they meet the statutory criteria for patentability. We do not have expertise in the innovation or commercialization processes. Second, we question whether we, as the agency responsible for examining applications, should be responsible for assisting businesses with developing patentable inventions.

Question 4: Has PTO given consideration to establishing outreach offices in centers of specific industrial activity that could help process patents faster? For example, would a patents center focusing on computers located in the Silicon Valley and/or around Boston, or a center specializing in semiconductors near Austin, Texas help those American industries? What would be the benefits or drawbacks of such centers?

Answer: The PTO has given consideration to establishing outreach offices in centers of specific industrial activity. It has been determined that such offices would not help to process patents faster and would not be cost-effective.

Outreach offices directed to specific industrial activity would not be practical at the present time due to the need for duplicating the paper file of applicable prior art for each such office. This would be costly even if the applicable prior art could be limited to a relatively small area of technology. Oftentimes, however, a specific industrial activity would require

a large spectrum of prior art. For example, an outreach office for semiconductor technology would require duplication of electrical and chemical search files. Inventions using semiconductors could occur in a multitude of technologies. This problem of providing an adequate paper search file may be overcome when the PTO automated patent system has been completed so that the prior art may be searched in electronic form.

Currently, by having all the examining functions centralized, the PTO is able to operate more efficiently than with decentralized branches. Any application which is filed is presently routed to the Application Branch and thereafter to the Examining Group having charge of the subject matter claimed. The Office of Documentation will decide the classification of an application when a question arises as to where an application should be examined. Once placed in a specific Examining Group, a specialist (examiner) in the subject matter being claimed will examine the application. This examiner will be able to interact with other examiners having expertise in related subject matter. Thus, when interdisciplinary issues arise, the specialists are able to readily consult with another to ensure quality examination. Furthermore, movement of the application files is quick and easy due to the short distances involved.

In contrast, the utilization of outreach offices would involve a duplication of effort in certain instances. Some type of administrative review branch (Application Branch) would be required to prepare the application for examination. If the subject matter was not solely within the realm of expertise of the examiners located in that outreach office, movement of the application to another outreach office or to the main office would be required. The examiners located in any outreach office would be unable to interact as efficiently as can be done presently with examiners located elsewhere. The advantages which might accrue to an applicant filing an application in the area of "specific industrial activity" would not necessarily be available to another whose application involves subject matter foreign to industrial activity for which an outreach office has been established.

The PTO has taken steps to help speed the patent process and to disseminate patent information. For example, the PTO has a trial program which permits the use of facsimile transmission to the Office to improve communications between patent applicants and patent examiners and other PTO officials. The PTO is preparing rules to make permanent the use of facsimile transmissions.

The PTO has given emphasis to speeding the administrative processing of patent applications so that the applications will reach the examining corps as soon as possible. The PTO has also continued to keep the average pendency of patent applications to

18 months from the date of filing to either issue of a patent or abandonment.

The PTO has continued to establish Patent and Trademark Depository Libraries (PTDLs) across the United States. At the present time, there are 70 PTDLs which make direct access to patent information available in 45 states and the District of Columbia. Each PTDL has numerically arranged collections of full-text patents, collections of the Official Gazette and other patent search tools, excellent support collections in science and technology, and expert library staff trained by the PTO to provide assistance to the public. Fourteen PTDLs will be provided with APS text search capability on a trial basis this fiscal year. If funding permits, the text search capability will be deployed to all 70 PTDLs next fiscal year.

In view of the above, we believe our current outreach efforts are the most economical, efficent, and effective.

Question 5: Can you provide a breakdown of PTO fee revenues among companies of different sizes? Could you also indicate the foreign versus domestic breakdown of that data?

Answer: For patent applications, patent issues, and patent maintenance fees under Public Law 97-247, we can only provide a breakdown of fee revenues between large and small entities (we do not collect information using any finer distinctions than these). Large entities are companies with 500 or more employees. Small entities are individuals, non-profit organizations, or small businesses with fewer than 500 employees. Other fee revenue categories do not have this breakdown available.

Actual fee revenues in fiscal year 1990 for which we can make the distinction can be categorized as follows:

	Small Entity	Large Entity
Patent Applications	$11,497,000	$51,199,000
Patent Issues	$8,765,000	$40,375,000
First Stage Maintenance Fees under Public Law 97-247	$3,549,000	$22,516,000

We can categorize patent application, patent issue and trademark application fee revenues into U.S.-origin and foreign-origin categories as follows:

	U.S. Origin	Foreign Origin
Patent Applications	$35,110,000	$27,586,000
Patent Issues	$26,192,000	$22,948,000
Trademark Applications	$18,884,000	$3,570,000

Question 6: What is your general impression of American industry's record over the past few years in developing patentable inventions? Has it improved, declined or remained steady in comparison to foreign competition? How are American companies performing in so-called "emerging technologies" or those that are expected to be important to the economic future of our country?

Answer: The number of utility patents granted annually to U.S.-resident inventors has fluctuated greatly without any strong sign of growth during the 1970 to 1990 period. However, because of the increasing number of patents granted to foreign-resident inventors, the share of annual utility patents which were granted to U.S.-resident inventors declined from 73 percent of all utility patent grants in 1970 to 52 percent of such grants in 1987. The U.S.-resident inventor share has been stable since 1987.

The number of patents granted annually that are assigned to U.S. corporations has fluctuated greatly during the 1970 to 1990 period with no clear trend upward or downward. These U.S. corporate patents have declined as a share of the total number of utility patents, however, from 54 percent in 1970 to 37 percent in 1990.

The increasing foreign presence in U.S. patenting is reflected in the list of top patenting organizations for 1990. Of the top ten organizations receiving patents in 1990, three were U.S. corporations, five were Japanese corporations, and two were European corporations. In 1970, the top nine organizations receiving patents were U.S. corporations.

In the emerging technologies of superconductors and genetic engineering, inventors residing in the United States have held a majority share of the patent grants (55 to 60 percent and 75 percent, respectively, of all such grants).

Inventors residing in the United States continue to hold a strong position in patenting in nuclear energy technology (47 percent of such grants in 1989, up from 43 percent in 1977), medical devices (68 percent of such grants in the first half of 1990, down from 75 percent in 1977), and pharmaceuticals (49 percent of such grants in the first half of 1990, down slightly from 52 percent in 1977).

7

Inventors residing in the United States have suffered declines in the share of patents in some technologies, however, such as in semiconductor devices and manufacture (47 percent of such grants in 1990, down from 63 percent in 1977) and internal combustion engines (31 percent of such grants in 1990, up from 28 percent in 1988 but below the 44 percent share obtained in 1977).

Comparison of Patent Fees

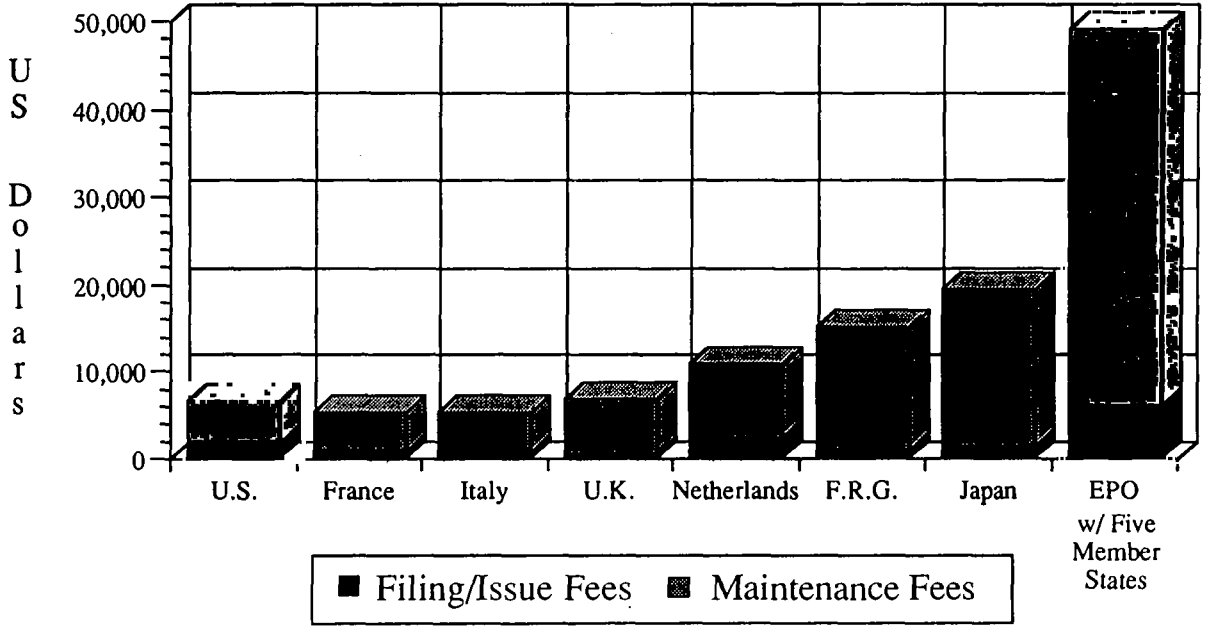

GERMAN PATENT OFFICE

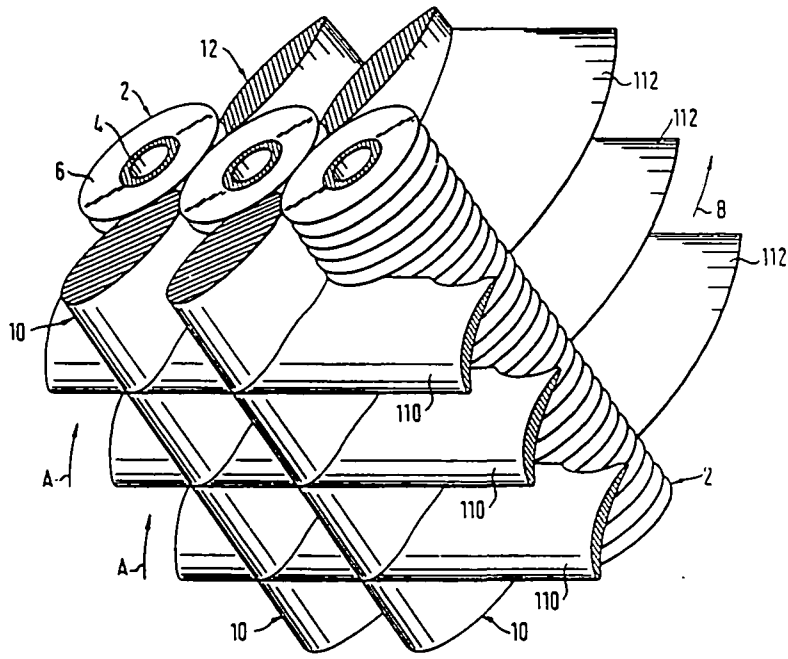

ANNUAL REPORT 1989

Budget Development

	1987	1988	1989
Income in DM	211 599 000	222 809 000	225 2[illegible] 000
Expenditure in DM	188 657 000	190 910 000	194 202 000
Staff expenditure therein contained in DM	124 317 000	125 747 000	126 883 000
Publications			
Income in DM	6 728 000	6 093 000	7 885 000
Expenditure in DM	43 005 000	42 343 000	44 [illegible] 000
Number of staff	2 254	2 267	2 246

Comments

The above income includes fees of the Federal Patent Court amounting to approx. 1.1 million DM.
The figures indicated in respect of the expenditure refer to the Patent Office expenditure only.

In addition thereto, the following expenses accrued:

Expenditure of the Federal Patent Court	22.7 Mio DM
Expenditure for beneficiaries of the pension scheme of the German Patent Office and the Federal Patent Court	53.9 Mio DM
Other expenditure (e.g. family allowance, sickness, relief, amortization)	7.0 Mio DM

Europäisches Patentamt	European Patent Office	Office européen des brevets

Jahresbericht 1988

Annual Report 1988

Rapport annuel 1988

Fig. 4

Haushaltsergebnis 1988: Zusammenfassung der Einnahmen und Ausgaben in Millionen DEM

Operating results 1988: Summary of income and expenditure in DEM millions

Résultats de l'exercice 1988: récapitulation des recettes et des dépenses exprimées en millions de DEM

			Betrieb Operation Fonctionnement		Pensionssystem Pensionscheme Régime de pensions		Insgesamt Total Total	
Einnahmen	**Income**	**Recettes**	Budget *Budget* Budget	Ergebnis *Result* Comptes	Budget *Budget* Budget	Ergebnis *Result* Comptes	Budget *Budget* Budget	Ergebnis *Result* Comptes
Einnahmen aus Anmelde- und Recherchentätigkeit	Income from filing and search	Recettes perçues au titre du dépôt et de la recherche	213.1	220.4			213.1	**220.4**
Einnahmen aus Prüftätigkeit	Income from examination	Recettes perçues au titre de l'examen	149.8	158.7			149.8	**158.7**
Beiträge der Vertragsstaaten	Contributions by Contracting States	Contributions des États contractants	—	—	—	—	—	—
Jahresgebühren für europäische Patente	Renewal fees for European patents	Taxes annuelles perçues pour les brevets européens	56.9	47.5			56.9	**47.5**
Beiträge des Personals zur Finanzierung des Ruhegehaltssystems	Staff contributions towards financing the pension scheme	Autres recettes. Contributions du personnel au financement du régime de pensions			13.4	13.6	13.4	**13.6**
Verkauf von Veröffentlichungen u. Druckschriften	Sales of publications and printed works	Vente de publications et d'imprimés	7.5	7.3			7.5	**7.3**
Einnahmen aus Recherchentätigkeit für Mitgliedstaaten des früheren IIB	Income from searches on behalf of former IIB Member States	Travaux de recherche effectués pour le compte des anciens États membres de l'IIB de tiers	34.9	39.9			34.9	**39.9**
Einnahmen aus Recherchentätigkeit für Dritte	*Income from searches on behalf of third parties*	*Recettes perçues au titre de travaux de recherche effectués pour le compte de tiers*	8.9	11.1			8.9	**11.1**
Sonstige Einnahmen	Other income	Autres recettes	22	38.5	42.2	52.7	64.2	**91.2**
Summe	**Total**	**Total**	**493.1**	**523.4**	**55.6**	**66.3**	**548.7**	**589.7**
Ausgaben	**Expenditure**	**Dépenses**						
Personal	Staff	Dépenses relatives au personnel	301.4	300.2	8.3	8.3	309.7	**308.5**
Ausgaben für Gebäude und Material	Expenditure in respect of buildings and equipment	Dépenses relatives aux immeubles et au matériel	37.3	32.2			37.3	32.2
Betriebsausgaben	Operating expenditure	Dépenses de fonctionnement	59.9	54.0	0.9	4.2	60.8	**58.2**
Ausgaben für Dienstreisen, Sitzungen und Repräsentationszwecke sowie die Zusammenarbeit auf dem Gebiet der techn. Hilfe	Expenditure in respect of duty travel, meetings, representation and technical assistance co-operation	Frais de mission, de réunion, de représentation et de coopération en matière d'assistance technique	6.4	6.2			6.4	**6.2**
Veröffentlichungen	Publications	Publications	39.1	39.1			39.1	**39.1**
Investitionen	Capital expenditure	Dépenses d'investissement	21.1	20.3			21.1	**20.3**
Zentralisierung des europäischen Patentsystems	Centralisation of the European patent system	Centralisation du système européen des brevets	6.3	5.3			6.3	**5.3**
Zwischensumme	Sub-total	*Total partiel*	471.5	457.3	9.2	12.5	480.7	469.8
Überschuß	Operating surplus	Excédent	21.6	66.1	46.4	53.8	68.0	119.9
Summe	**Total**	**Total**	**493.1**	**523.4**	**55.6**	**66.3**	**548.7**	**589.7**

2.5
Haushalt, Pensionssystem

2.5.1
Haushaltsergebnis 1988

Fig. 4 vermittelt einen Überblick über das Haushaltsergebnis 1988. Aus der Finanzübersicht geht hervor, daß die Einnahmen Ende 1988 mit 589,7 Mio DEM die in Ausführung des Haushaltsplans 1988 getätigten Ausgaben von 469,8 Mio DEM um 119,9 Mio DEM oder um 25,5% übertrafen. Von dem Überschuß verbleiben 53,8 Mio DEM bestimmungsgemäß im Pensionssystem, der andere Teil von 66,1 Mio DEM wird dem nachfolgenden Haushaltsplan 1989 als Verstärkungsmittel zugeführt.

Im Hinblick auf den bisherigen starken Anstieg der Anmeldezahlen mußte auch das Personal des Amtes im notwendigen Umfang verstärkt werden. Da dieser Trend weiter anhält, die vorhandenen Raumreserven jedoch mittlerweile erschöpft sind, bedarf es vordringlich einer Erweiterung der vorhandenen Raumkapazitäten in München und in Den Haag. Aus diesem Grunde beabsichtigt das Amt, ein bereits im Bau befindliches Bürogebäude in München zu erwerben und in Den Haag nach Durchführung eines internationalen Architektenwettbewerbs einen Neubau für die Unterbringung seiner dortigen Zweigstelle zu errichten.

Für die geplanten Neubauprojekte werden im Haushaltsjahr 1989 und in den Folgejahren verstärkt Finanzmittel bereitzustellen sein. Nachdem die sogenannte „alte Last" (offene, nicht gedeckte Pensionsansprüche) abgetragen worden ist, werden erstmalig die effektiven Überschüsse des Betriebs 1988 dem Haushalt 1989 zugeführt. Die Verstärkung der Einnahmeseite 1989 dient zur teilweisen Deckung des zusätzlichen Finanzbedarfs für die Neubauprojekte in München und in Den Haag.

Im Überschuß „Betrieb 1988" sind rd. 9 000 000 DEM enthalten, die von der niederländischen Regierung Ende 1988 (als Kostenbei-

2.5
Budget and pension scheme

2.5.1
Operating result 1988

Fig. 4 shows the operating result for 1988, with income at DEM 589,7 million exceeding expenditure of DEM 469,8 million in implementation of the budget by DEM 119,9 million or 25,5%. Of this surplus, DEM 53,8 million was allocated to the pension scheme and the remaining DEM 66,1 million will be brought forward to bolster the 1989 Budget.

The Office's staff complement has had to be increased to keep pace with the steep rise to date in the number of applications. As this situation will continue into the future and all available accommodation is in use there is an urgent need for more space in Munich and The Hague. The Office therefore intends to acquire an office building already under construction in Munich and to build new premises for its branch office at The Hague, for which an international architectural competition is being held.

Additional funds will need to be set aside for the new buildings in 1989 and the years thereafter. Now that sufficient funds have been set aside to cover accumulated pre-existing pension obligations, the full operating surplus can for the first time be transferred from the 1988 accounting period to the 1989 Budget. Higher income in 1989 will be used to provide some of the extra funds needed for the new buildings in Munich and The Hague.

The 1988 operating surplus includes some DEM 9 million paid by the Netherlands Government at the end of 1988 as a contribution towards the acquisition of the site at Leidschendam.

The European Patent Office is financially autonomous and its income is derived mainly from fees paid by applicants and patent proprietors.

2.5
Budget, régime de pensions

2.5.1
Résultats de l'exercice 1988

La figure 4 donne une récapitulation des résultats de l'exercice 1988. Il ressort de ce tableau de la situation financière qu'à la fin de l'année 1988 les recettes, soit 589,7 millions de DEM, étaient supérieures de 119,9 millions de DEM (25,5%) aux dépenses effectuées en exécution du budget 1988, soit 469,8 millions de DEM. Conformément aux dispositions applicables en la matière, sur cet excédent, 53,8 millions de DEM ont été maintenu au fonds de pensions, et le restant, soit 66,1 millions de DEM, a été reporté sur le budget pour 1989 à titre de crédits supplémentaires.

Compte tenu de l'augmentation importante du nombre de demandes enregistrées jusqu'ici, il a fallu également renforcer en conséquence les effectifs de l'Office. Or, comme cette tendance se poursuit et que les bureaux disponibles ont depuis tous été occupés, il est devenu urgent de prévoir des locaux supplémentaires à Munich et à La Haye. C'est pourquoi l'Office envisage d'acquérir à Munich un immeuble de bureaux qui est déjà en cours de construction et de faire construire à La Haye, après avoir organisé un concours international d'architecture, un nouveau bâtiment pour y abriter son département aux Pays-Bas.

Au cours de l'exercice 1989 et des exercices suivants, il conviendra de prévoir des crédits plus importants pour ces projets de nouveaux bâtiments. «L'ancienne charge» (droits à pension non couverts) pouvant désormais être financée, les excédents d'exploitation effectifs de l'exercice sont en 1988 affectés pour la première fois au budget pour 1989. L'accroissement des recettes en 1989 sert à couvrir en partie les besoins financiers supplémentaires engendrés par les projets de construction de nouveaux bâtiments à Munich et à La Haye.

RESPONSES TO QUESTIONS SUBMITTED BY

SENATOR LEAHY

Question 1: Patent misuse reform:

The 1988 legislation to authorize appropriations for the Patent and Trademark Office amended section 271(d) of title 35, United States Code, with regard to patent misuse. Would you discuss the effectiveness of the patent misuse reform.

Answer: Section 201 of Public Law 100-703 provides that two types of practices, refusals to license or use a patent, and "tying" under certain circumstances, not be considered patent misuse or illegal extension of the patent right. While this amendment to section 271(d) of title 35, United States Code, affords patentees greater flexibility in realizing the full value of their patents, we have no information on how effective this provision has been over the past two years. Further, it would appear to be difficult to quantify the effect of a provision of this nature. The advantages of a patentee's being able to refuse to license or to use the patent altogether cannot readily be gauged. Also, the ability to condition a patent license on the acquisition of another license or product purchase will probably only be exercised in appropriate circumstances which are not readily identifiable. Yet, these licensing tools are valuable and need to be available to the patent owner when circumstances dictate their use.

Question 2: Patent application reform:

The stimulation of American inventive genius requires a patent system that offers our inventors prompt, consistent and effective protection for their inventions. Twenty-one years after filing his initial patent application, Gilbert Hyatt was recently awarded a patent for the invention of a computer microprocessor. The delay, breadth and surprise of the patent sent shock waves through the computer industry. The case highlights critical questions about the patent application process. Do you think we need to reform the procedures for obtaining a patent, and, if so, how? For example, do you think there should be limits on the number of continuations that an inventor can file?

Answer: This is an important question that needs to be examined thoroughly. We have specifically requested that the Advisory Commission on Patent Law Reform consider it. This Commission was established by the Secretary of Commerce, Robert A. Mosbacher, to review the operation of the U.S. patent laws and to propose any needed reforms. At their first meeting on March 26, 1991, a range of issues were identified for consideration, including the term of protection, automatic publication, and our practice with

respect to continuation applications. The final report and recommendations of the Commission are due to the Secretary in August 1992. We would, therefore, prefer to await the Commission's conclusions before making any suggestions for change.

Question 3: Increase in patent fees:

At the 1985 authorization hearing, I asked Acting Commissioner Quigg about the impact of fee increases on the number of patent and trademark applications. He replied that there was no evidence that increased fees have adversely affected the decisions of businesses to file for patents or trademark registrations. Is this your view at the present time? What is the projected impact of the 69% increase in patent fees that went into effect in November 1990? What is the projected impact of the elimination of certain subsidies for small business?

Answer: Certainly, some individual inventors or companies may elect not to file patent applications in light of the fee increases that became effective last November or our proposed increases. We believe, however, that overall individuals and businesses will continue to use the patent system. While we have not received the number of patent applications we expected to receive so far this fiscal year, we are still receiving applications at a slightly higher rate than last year. This lower-than-expected rate of filing may be due to general economic conditions, the Gulf War, a simultaneous increase in the fees of the European Patent Office, and other factors as well as the increase in our fees. Furthermore, there is no indication that the mixture between large entities and small entities and the mixture between U.S. and foreign nationals has changed significantly since the November fee increase.

As to trademarks, fees were not increased last November. Yet, the number of applications received thus far this year was less than we anticipated. We can only conclude that this reduced filing rate was due to general economic conditions or is a result of the implementation of the Trademark Law Revision Act of 1988. We do not believe that our proposed increases will have a significant or lasting effect on the use of the Federal trademark registration system.

Question 4: Automation Program:

Certain parts of the Automated Patent System (APS) are currently available to the public in your search facilities. In your written statement, you describe plans to extend public access to other parts of the system, and to provide on-line access at depository libraries throughout the Nation. Could you be more specific about the timetable for implementing these plans? What

sources of income are being used to cover the cost of public access to the APS?

Answer: The full-text portion of APS is now available in our public search rooms. Portions of the image data base of APS in use by examiners are also available to the public there. We will make additional portions of the image data base available in our public search room as they become available to the examiners. We expect to deploy an image data base for all examiners during the upcoming authorization cycle.

We expect to provide the full-text data base to 14 Patent and Trademark Depository Libraries later this year on a pilot basis. Furthermore, we plan to provide it to the remaining Libraries in fiscal year 1993. We have not yet scheduled deployment of the image data base in these Libraries.

The cost of providing access to the full-text data base in our public search room is defrayed by a user fee set at the marginal cost of providing this service. We generally do not charge for access to those data bases that are available on a pilot basis. Once the data base is operating on a routine basis, however, we will charge the marginal cost of providing the service to defray the cost of the service.

Question 5: As you know, the Subcommittee on Technology and the Law has jurisdiction over the Semiconductor Chip Protection Act (SCPA). I would like to take the opportunity in this forum, however, to ask you about the SCPA because Congressman Hughes and I are planning to introduce legislation to amend section 914 of the SCPA. I note that, in your written statement, you said that one of your legislative priorities is to amend the SCPA.

5A: You issued a report to Congress on the operation of section 914 of the SCPA of 1984 on July 1, 1990. I understand that several foreign countries have enacted laws substantially similar to the SCPA since the report was written. Which countries have enacted legislation, and what is the current status of legislation in other countries that have been granted interim protection under section 914 of the SCPA?

Answer: Of the 19 countries to which protection has been extended, only one has yet to enact legislation. Laws are in place in Japan, Sweden, Australia, the 12 Member States of the European Economic Community, Austria, and Finland. Canadian legislation has been passed and will come into force when the regulations are finalized. Legislation is pending before the Parliament of Switzerland. In Switzerland, the recently enacted Federal law on Unfair Competition gives some protection to semiconductor chips.

Question 5B: The United States has been working to secure a multilateral international agreement that would provide adequate and effective protection for mask works. Would you describe in some detail the status of negotiations regarding proposals for the protection of semiconductor chips at the Uruguay Round of the GATT?

Answer: The United States and Japan have jointly supported the inclusion of the acceptable Articles from the Washington Treaty into the GATT text on intellectual property. This proposal has not been widely supported. Most of the participants prefer to refer to the Washington Treaty and include only those specific deficiencies found in the Washington Treaty.

Question 5C: What is the extent of global piracy of chip designs? Is piracy of chip designs a significant threat to the U.S. semiconductor industry at this time?

Answer: Industry has not reported incidents of chip piracy in either the proceedings that have been held to extend existing interim orders or as part of the Special 301 review process.

Question 5D: The authority of the Secretary of Commerce to issue interim protection orders under section 914 of the Semiconductor Chip Protection Act sunsets on July 1, 1991. I am introducing a bill to extend this authority for four years, to continue the incentive for foreign countries to work expeditiously toward the protection of mask works. The Administration proposed an indefinite extension. Do you not think that Congress should have the opportunity to review the section 914 process every few years?

Answer: As we mentioned in our July 1, 1990, report, we believe that a review of the 914 process should be a part of the overall oversight exercised by the Congress. While we certainly do not oppose Congressional oversight of the operation of section 914, we would prefer an indefinite extension of the authority to issue the interim orders because we are convinced that the section has and will continue to have utility. However, the Administration would also support a limited extension as stated in the Office's statement before the House Judiciary Subcommittee on Intellectual Property and Judicial Administration on May 1, 1991.

Question 5E: At a 1987 hearing held by the Subcommittee on Technology and the Law on issues confronting the semiconductor industry, I asked Commissioner Quigg if there had been any indications that foreign countries may be failing to implement laws granting protection -- as distinguished from enacting the

laws in the first place. He said that implementation problems had arisen with Japan, but they were quickly resolved after a meeting between United States and Japanese representatives. Have other implementation problems arisen with respect to any foreign countries in the last four years?

Answer: None have been reported to us by industry.

Question 5F: The bill I am introducing includes a technical clarification of the authority of the Secretary of Commerce to issue interim protection orders under section 914 of the SCPA. Specifically, section of 914(a)(B) of title 17, United States Code, is amended by inserting "or implementing" after "enacting". Please discuss your position on this technical clarification.

Answer: We believe that the amendment to 914(a)(B) confirms existing authority. We would certainly have no objections if Congress wishes to make this authority explicit, so long as it is clear that it is only a reaffirmation of existing authority, and that it adds no new test of eligibility for a section 914 order.

Question 5G: The report to Congress on the operation of section 914 of the SCPA recommends that the SCPA be amended to permit the Secretary to extend interim protection orders under section 914 to international intergovernmental organizations like the European Community. Such authority was included in the regulations issued with respect to Presidential proclamations under section 902(a)(2). No such authority was requested, however, in the Administration's legislative proposal to amend section 914. What are the arguments for and against the recommendation to extend interim protection orders to international intergovernmental organizations?

Answer: Owing to the time constraints under which this bill is being considered, we did not believe that it was appropriate to include the potentially controversial recommendation that the SCPA be amended to permit the extension of protection to international intergovernmental organizations like the European Community. The question of whether protection for intergovernmental organizations should be extended in addition to or in lieu of protection for individual Member States, the impact that recognition of intergovernmental organizations in this context might have on other aspects of United States bilateral and multilateral intellectual property relations, and related issues, all need to be explored more fully in the legislative arena.

Presentation of

Harry F. Manbeck, Jr.

Assistant Secretary and Commissioner of Patents and Trademarks

Before the

Subcommittee on Patents, Copyrights and Trademarks

Committee on the Judiciary

United States Senate

April 11, 1991

Pre-1991

40% Public

60% Fees

FY 1991

Reconciliation Act Mandates 100% Fee Funding

69% Fee Surcharge Enacted

FY 1992/1993

Significant Costs of Long-Term Programs Were Not Considered During Reconciliation

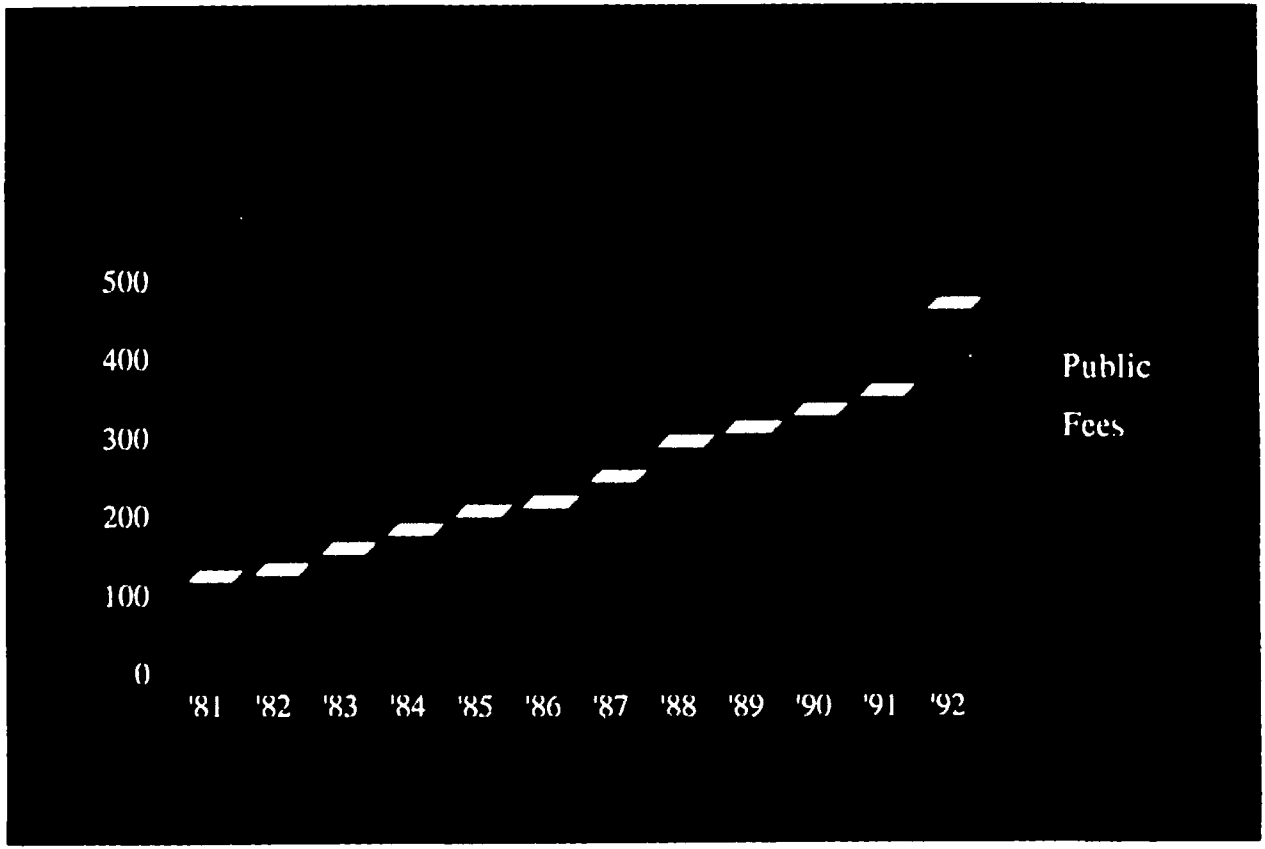
500
400
300
200
100
0
'81
'82
'83
'84
'85
'86
'87
'88
'89
'90
'91
'92
Public
Fees

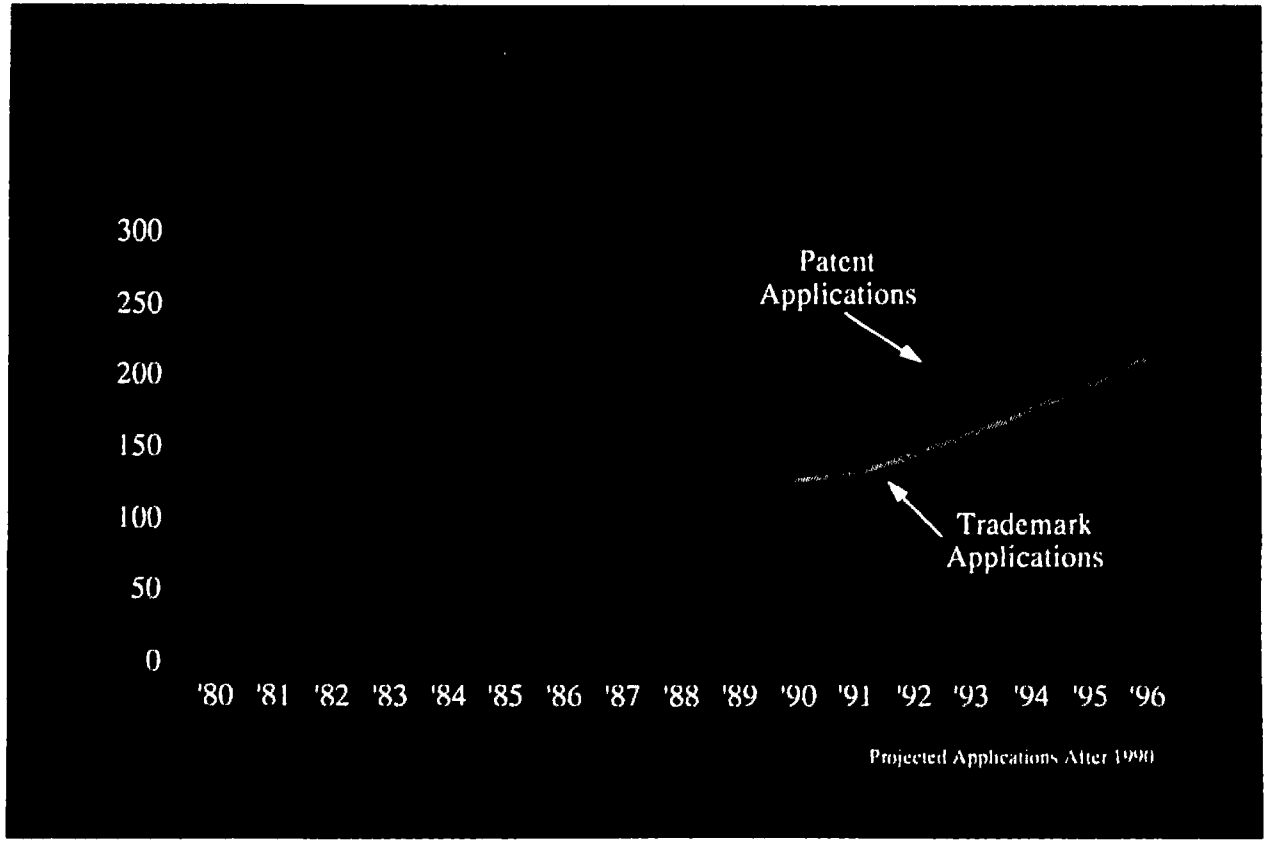
300
250
200
150
100
50
0
Patent Applications
Trademark Applications
'80 '81 '82 '83 '84 '85 '86 '87 '88 '89 '90 '91 '92 '93 '94 '95 '96
Projected Applications After 1990

We continue to believe the November 1990 fee increase was extremely ill-advised. We believe the 1990 increase has already raised fees to a level that is discouraging patent filings both by large companies and by the so-called "small entities"--independent inventors, universities, and businesses with fewer than 500 employees.

Patent fees for filing for, obtaining and maintaining a patent throughout its term are currently a minimum of $6680 for a large entity and $3340 for a small entity. For some of the largest filers, the 69 percent increase last year meant about $1 million per year in additional government fees. In at least some companies, this cost is being absorbed by decreasing the number of patent applications being filed.

The present level of fees obviously is a significant burden for the smaller entities. It must be kept in mind that creative inventors often have several patentable inventions in various stages of patenting and commercialization. It often takes years for an invention to be developed to the point that it generates any income. The result of the higher fees is that such inventors will drop the patenting and commercialization of their higher risk inventions, and the public will be deprived of the benefit of valuable technology.

Patent filings this year are running below the levels projected in the 1992 budget submission to the Congress. In our opinion the sharply higher levels of patent fees are a contributing factor to this. Although we do not have data on which filings are down, we suspect filings by U.S. companies and inventors may be down more than filings by foreign applicants. Such a slowdown in patenting of technology, if we are correct, will have adverse implications for the country's economic and technological competitiveness.

Small Entity Payments
Subsidy From Large Entities
Small Entity Payments
Subsidy From Large Entities

Senator DECONCINI. We will now take a panel with Mr. Donald Banner of the Intellectual Property Owners, Jerome Lee of the American Intellectual Property Law Association, and Mr. Thomas Smegal, Jr., American Bar Association.

Good afternoon, gentlemen.

Mr. LEE. Good afternoon, Senator.

Mr. BANNER. Good afternoon.

Senator DECONCINI. If you have full statements, we will put them in the record, and you would care to summarize them for us, let us start with you, Mr. Banner.

PANEL CONSISTING OF DONALD W. BANNER, PRESIDENT, INTELLECTUAL PROPERTY OWNERS, INC., WASHINGTON, DC; JEROME G. LEE, PRESIDENT, AMERICAN INTELLECTUAL PROPERTY LAW ASSOCIATION, ARLINGTON, VA; AND THOMAS F. SMEGAL, JR., AMERICAN BAR ASSOCIATION, SAN FRANCISCO, CA

STATEMENT OF DONALD W. BANNER

Mr. BANNER. Thank you, Senator. We do have a statement and I would appreciate it being part of the record. The Intellectual Property Owners once again thanks you, sir, for letting us express our views here. I think I can, in view of what we have heard already, shorten my statement a lot more than even I intended before. I know you will be glad to hear that.

Senator DECONCINI. Go right ahead.

Mr. BANNER. One of the things that we are facing, of course, here is something we are all trying to accomplish in the public interest to try to keep the Patent and Trademark Office going in a proper way. It has been going for a long time, but things have changed.

In the administration proposal, we know that there will be a 26-percent increase in spending in 1991, and in 1993 the spending would be 51 percent higher than it is in 1991. In 1992, we would have over a 20-percent increase in staff. I used to be in a big corporation, and if I went to some boss and said I want a 20-percent increase in staff, he probably would have sent me off to Siberia.

Rent is going to go up 63 percent. Automation is going to go up 27 percent in 1992 over the 1991 level, and 69 percent in 1993. Golly, that is a lot of money. Like you, we had a lot of complaints about the 69-percent increase in patent fees. Now, we are talking about, as you well know, increasing the fees even greater for smaller entities, and the thing that is important there is that 45 percent, as I understand it, of U.S.-origin applicants are in this category. The fees would be raised about 91 percent, if you talk about keeping the fees through the whole period, for 45 percent of our U.S. applicants. We think we had better look at these figures in great detail.

We have made several suggestions in our prepared paper as to what we might be thinking about and we hope that they will be helpful. One of the things that we have expressed is the thought that maybe automation should be taken out of the fees—the charges for automation should be taken out of the fees paid by current applicants because that really is a capital expense. It is going to last forever and ever. As the Commissioner said, it is a matter of

putting the prior art into a form that will be there forever. We would like to think about that.

My favorite President once said that as the times are new, we must think anew and act anew, and I think that is where we are now. We can't just keep repeating what we have been doing. We have been talking about the possibility of a government corporation, for example. Maybe we could borrow money and build a building and use it for Patent and Trademark Office purposes if we could do that. We know the leases are going to run out in 1996. This is the time that we should be thinking about that.

There are other things that a private business could do, and a government corporation could do it, too, like paying larger salaries, for example, to biotechnical people who are necessary and speed up the processing there—something we have to think about, and think about now.

One last thing, if I might, sir. You recently introduced bills S. 758 and S. 759, which would amend the patent and trademark laws. We are very, very strongly in favor of that legislation, and congratulate you on introducing it.

Thank you, sir.

[The prepared statement of Mr. Banner and written questions and answers follow:]

IPO INTELLECTUAL PROPERTY OWNERS, INC.

TESTIMONY OF DONALD W. BANNER, PRESIDENT
INTELLECTUAL PROPERTY OWNERS, INC.

ON LEGISLATION TO AUTHORIZE APPROPRIATIONS FOR THE PATENT AND TRADEMARK OFFICE

April 11, 1991

SUMMARY OF STATEMENT

- The 69 percent increase in patent fees in November 1990 was extremely ill-advised and may already be discouraging filings.
- IPO opposes the Administration's proposal for an additional increase of 91 percent in the fees for a small inventor to file for and issue a patent and maintain it throughout its life.
- At the same time, IPO opposes taxing large inventors in order to subsidize small inventors. Appropriations should be used to support the subsidy.
- IPO believes current patent and trademark applicants should not be expected to bear the burden of paying for long term capital improvements such as automation.
- IPO opposes giving the Administration open-ended authority to increase fees for processing, services, or materials under 35 U.S.C. 41(d).
- IPO opposes removing the "fence" around trademark fees and opposes shortening the 60 day period of advance notice of increases in fees.
- In response to the Administration's proposal to increase PTO spending by 26 percent in 1992 and a total of 51 percent by 1993, IPO urges an independent review of PTO spending.
- Such a review should include study of: (1) whether the PTO should be housed in a government-owned building; (2) whether spending for automation should be reoriented; (3) whether some employees are being paid at rates higher than necessary; (4) whether the production quota and bonus system is impeding the ability to reduce spending and increase productivity; (5) whether extra layers of management and support staff are necessary; and (6) whether the flexible working hours program is impairing the PTO's ability to serve the public.
- IPO recommends giving consideration to establishing the PTO as a government corporation.

1255 TWENTY-THIRD STREET, N.W., SUITE 850, WASHINGTON, DC 20037 (202) 466-2396
TELECOPIER (202) 833-3636 • TELEX 248959 NSPA UR

IPO INTELLECTUAL PROPERTY OWNERS, INC.

STATEMENT OF DONALD W. BANNER, PRESIDENT

INTELLECTUAL PROPERTY OWNERS, INC.

BEFORE THE

SENATE JUDICIARY SUBCOMMITTEE ON PATENTS, COPYRIGHTS AND TRADEMARKS

ON

LEGISLATION TO AUTHORIZE APPROPRIATIONS

FOR THE PATENT AND TRADEMARK OFFICE

April 11, 1991
1:30 P.M.

1255 TWENTY-THIRD STREET, N.W., SUITE 850, WASHINGTON, DC 20037 (202) 466-2396
TELECOPIER (202) 833-3636 • TELEX 248959 NSPA UR

INTELLECTUAL PROPERTY OWNERS, INC.

Mr. Chairman and Members of the Subcommittee:

I am appearing here today on behalf of Intellectual Property Owners, Inc. (IPO). IPO is a non-profit association whose members own patents, trademarks, copyrights and trade secrets.

IPO's members are responsible for a substantial portion of the research and development conducted in the United States, and they pay large amounts of fees to the Patent and Trademark Office (PTO). They are therefore interested in having the office operate as effectively as possible.

I personally have had a long-time interest in the operations of the Patent and Trademark Office. I had the privilege of serving as Commissioner of Patents and Trademarks in 1978 and 1979.

IPO witnesses have testified in the past on several bills to authorize appropriations for the Patent and Trademark Office. Our views on the importance of having a viable patent system and on the need for high quality patent examining work and adequate funding for the office have not changed.

We have prepared our comments based on our study of the text of the Administration's authorization bill and our review of the office's 1992 budget submission to the Congress. We have not yet seen the draft regulations that would implement the Administration's recommendations for higher PTO fees effective October 1.

ROLE OF THE PATENT AND TRADEMARK OFFICE

An effective system for protecting inventions and other intellectual property is very important for encouraging R&D, commercialization of new technology, and business investment in America. The Patent and Trademark Office, of course, is a cornerstone of the patent and trademark systems.

We are generally in agreement with the main Patent and Trademark Office goals as stated in the office's 1992 budget submission to the Congress, which are:

- To maintain patent pendency at 18 months and continue to improve patent quality
- To maintain trademark pendency
- To automate the patent and trademark processes in the 1990's
- To strengthen worldwide protection of intellectual property

In order for patent and trademark protection to be relied upon by industry, the office must perform high quality examining work. We continue to believe, therefore, that a top priority of the Patent and Trademark Office must be to ensure high quality patents and trademarks.

We are also generally in favor of short pendency, but it would be a mistake to make a fetish of maintaining patent pendency at precisely 18 months at the expense of quality. In an IPO survey we reported in Congressional testimony a few years ago, patent owners ranked shortening the average pendency time of patent applications as sixth in importance of seven objectives of the office. High quality patent examination and automating the search files were ranked much higher. Although we have not conducted a formal survey of patent owners recently, we believe their attitudes have not changed significantly.

Short patent application pendency is important for certain industries and certain patent owners. The biotechnology industry currently is very concerned about the large backlog of unexamined biotechnology applications. We urge doing everything possible consistent with maintaining high quality examination to reduce the biotechnology backlog.

The backlog of unexamined applications for design patents also continues to be significant. Design patent applicants are generally interested in obtaining patent protection more quickly than other patent applicants. Styles in the appearance of articles can change quickly.

While we support legislation to establish a new system of copyright-like protection for industrial designs, that legislation will not be a complete substitute for design patents. The office should plan to reduce the design patent backlog to the lowest possible level. We suggest that the office announce a goal substantially shorter than 18 months-- perhaps 12 months-- for design patent application pendency.

IPO strongly supports automating the office's operations. We believe automating the PTO search files is one of the keys to improving the quality and reliability of the patents and trademark registrations issued by the PTO over the long term.

Nonetheless, not all of the eggs should be put in the automation basket. A major factor adversely affecting the quality of patent examination is poor integrity of the paper patent search files. Testimony has been presented over the years that large numbers of documents are missing or misfiled in the paper search files. We believe this situation continues to deteriorate. The paper files must be maintained in adequate condition until full automation can be achieved.

CURRENT PATENT FEE LEVELS

The levels of fees for filing for and issuing a patent and maintaining it in force throughout its life have risen dramatically. In 1982 the office's fee collections totaled less than $29 million. For 1992 they are estimated at $459 million.

Before 1980 the office was chronically under funded. Important changes in fees were made by Congress in 1980 and 1982. When the 1980 and 1982 patent fee laws were passed, which introduced the concept of fees for maintaining patents in force and raised other patent fees substantially, all parties concerned agreed that higher fees would be used to make improvements in the office's operations. Industry and the patent bar expected improvements in the office would be made in the years following 1982, and some improvements were made.

From 1982 until 1990 there was general agreement that certain operations of the office should continue to be supported by appropriated funds. The thinking was that certain costs of operating the office confer no direct benefit on patent or trademark applicants, but go to the benefit of the national economy and should be paid for by the taxpayers at large. Among others, costs that IPO believes are of special benefit to the public at large and important in maintaining the nation's technological leadership include those costs relating to public information, legislation and international affairs, and the operation of the public search rooms.

Other significant PTO activities that benefit the national economy more than individual applicants include printing patents, at a cost of over $30 million a year, and automating the search files, projected to be $87 million in 1992 and over $115 million per year in fiscal years 1993 and 1994. Automation will help future patent and trademark applicants as well as improve dissemination of information, but it does nothing for current patent and trademark applicants. It is unfair to ask them to pay for it.

In the omnibus budget reconciliation law passed on November 5, 1990, patent fees were raised precipitously by 69 percent and the office was made essentially self-sustaining. This change was made as a result of secret budget negotiations between the Executive Branch and the Congressional leadership with no opportunity for input by members of the public concerned with patents, nor any meaningful input, we understand, by members of the Senate or House Judiciary Committees.

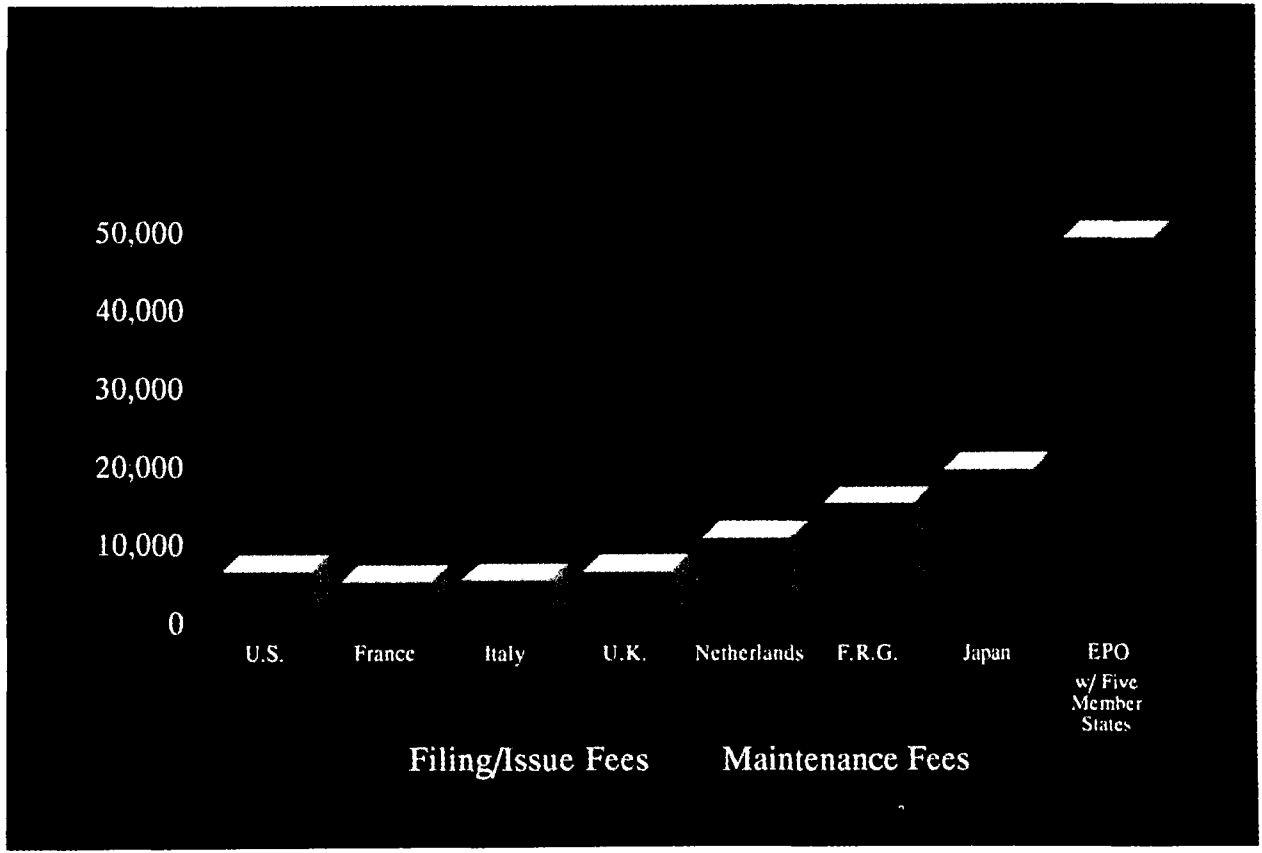
50,000
40,000
30,000
20,000
10,000
0
U.S.
France
Italy
U.K.
Netherlands
F.R.G.
Japan
EPO w/ Five Member States
Filing/Issue Fees
Maintenance Fees

We suggest that the subcommittee investigate the most recent patent filing rates for large and small U.S.-origin applicants and large and small foreign-origin applicants.

THE ADMINISTRATION'S AUTHORIZATION BILL

The Administration is now proposing that the fees for small entities be increased by another 91 percent on top of last year's 69 percent increase. Ninety-one percent is the amount of the increase for a small entity applicant who pays the minimum fees for filing, issuing, and maintaining a patent throughout its life. The burden on the small entity applicants of a fee increase of this magnitude is so apparent that we believe it does not bear discussion.

Forty-five percent of U.S.-origin patent applications filed in the PTO come from small entity applicants. Contrary to popular opinion, the small inventor is by no means extinct.

On the other hand, with the Patent and Trademark Office being essentially 100 percent self-supporting from fee income since last November, the result has been that large entity applicants are being taxed to subsidize small entity applicants. This is unfair.

One solution is for Congress to reinstate a level of appropriations from general taxpayer revenue to cover the subsidy for small entity applicants. In our opinion this would be an effective step that Congress could take to help maintain America's technological competitiveness. Another approach to alleviating the fee burden for both large and small applicants is to avoid charging current applicants for

expenses such as automation that are long term capital improvement expenditures. Capital improvements could be paid for with taxpayer funds or, as I will explain, with borrowed money.

Another suggestion is an amendment to the Internal Revenue Code to provide individual inventors who apply for patents with a tax credit for a substantial portion of the amount paid in PTO fees. We would support this approach.

We urge the subcommittee to reject the Administration's proposal for increasing small inventor fees, and also to reject any scheme for supporting small inventors that unjustly taxes large companies to support them.

We also object to a number of other features in the Administration's bill. The amendment to 35 U.S.C. 41(d) made by section 4 a. of the bill, authorizing the PTO to increase miscellaneous fees for processing, services, or materials related to patents, is open-ended. The section 41(d) fees, which are for copies of patents and documents and various services, currently generate about $13 million in revenue. According to a recent statement by a PTO official, the Administration's forthcoming rule proposal will raise these fees by about 175 percent.

We disagree with the Administration's statement in the materials accompanying the bill to the effect that section 4 a. is merely a clarification of the PTO's authority under existing law. The existing text of 35 U.S.C. 41(d) makes clear that section 41(d) fees may not be higher than the level necessary "to recover the estimated average cost of the Office of such processing, services, or materials." The Administration is proposing to remove this limitation.

Since the section 41(d) fees are not subject to the Consumer Price Index limitation that applies to other fees, the Administration's proposal is to allow the section 41(d) fees to be increased as often and as much as the Administration chooses, without any approval from Congress. We disapprove of this high-handed approach. We recommend that the section 41(d) fees be kept at a level that recovers the cost of the "processing, services, or materials" provided, perhaps with latitude for these fees to also recover a pro rata share of general overhead expenses of the PTO, but only in categories identified by Congress that should be paid for by user fees rather than by taxpayer appropriations. Expenses such as automation that do not benefit current users should not be supported by patent processing fees, trademark processing fees, or section 41(d) fees.

We also object to section 4 f. of the bill, which proposes to repeal the "fence" that Congress erected around trademark fees to prohibit the use of trademark fee revenues for purposes other than administering the trademark act. The language of section 4 f. seems to sanction the use of trademark fee revenues even for federal government programs outside the Patent and Trademark Office. We recommend not only retaining the prohibition against using trademark fees for purposes other than administering the trademark law, but also adding language to prohibit using patent fees for purposes other than for administering the patent law.

We are opposed to section 4 c. of the bill, which would shorten to 30 days the 60 day advance notice in the Federal Register that is given to the public concerning new fees. A minimum of 60 days notice of new

fees is still needed. Patent practitioners and inventors ordinarily do not subscribe to or read the Federal Register on a regular basis. Industry and the patent bar have complained on a number of occasions about insufficient notice given by the PTO in announcements published in the Federal Register. We suggest amending the statute to guarantee the public 60 days notice after the date of announcement of new fees in the PTO's Official Gazette.

An additional issue that the subcommittee should deal with in the authorization bill is whether the Patent and Trademark Office should be exempt from confiscation of funds in the event of a future government-wide reduction in spending mandated by deficit control legislation. We are not familiar with the details of the amendments made last year to the legislation formerly known as the "Gramm-Rudman-Hollings Act", but it is our understanding that the potential still exists for PTO user fees to be confiscated in a government-wide spending reduction. If that is true, the law should be changed.

Under the Gramm-Rudman-Hollings legislation, PTO user fees were confiscated as a part of government-wide "sequestrations." User fees should not be subject to the same deficit control legislation that applies to government agencies relying on appropriated funds. We urge the subcommittee to investigate whether an exemption for the PTO is needed.

CONTROLLING PATENT AND TRADEMARK OFFICE SPENDING

In this first year after the PTO has become essentially fully self-sustaining from user fee income, the Administration has proposed a budget to Congress of $462 million for 1992 and is projecting a budget of $555 million for 1993. The PTO budget is $368 million in 1991. Therefore, the Administration is asking for a 26 percent increase in 1992 over 1991 and a 51 percent increase in 1993 over 1991.

Office space rent for the PTO is rising to $47.7 million in 1992, compared with $29.3 million in 1991. This is a request by the Administration for a 63 percent increase in one year.

Automation spending is $87.4 million in 1992 and $115.8 million in 1993. Automation spending is estimated at $68.7 million in 1991. Thus the Administration is requesting a 27 percent increase in 1992 over 1991 and a 69 percent increase in 1993 over 1991.

In light of the burdensome levels of users fees being charged and the additional increases being proposed, it must be asked whether PTO spending is being controlled adequately. While it is difficult for us to fully analyze the complex 139 page document explaining the 1992 PTO budget, we offer the suggestions below for controlling PTO spending. We urge the subcommittee to conduct or arrange for an independent analysis of PTO spending.

We want to stress that we believe the PTO's employees are hard-working, dedicated individuals who deserve fair compensation and benefits and reasonable working hours. In the face of the burdensome fees facing the users of the PTO, we are merely raising the same questions that are

raised constantly in every private sector business concerning possible improvements in efficiency and effectiveness of operations.

IPO's suggestions for controlling spending:

I. Study the feasibility of building a government-owned building to house the PTO when the PTO's leases expire in 1996.

With a government-owned building, it may be possible not only to reduce office space costs, but also to improve efficiency of the PTO by having space designed especially for PTO needs. A PTO building could either be built with taxpayer revenues or with borrowed money.

II. Reorient spending for automation to utilize less expensive equipment and to make automated records available to examiners and the public at an earlier date.

Since 1983 the Patent and Trademark Office has spent around $300 million attempting to automate the patent search files, with very little to show for it so far. Many observers in industry and the patent bar believe the PTO should utilize less expensive equipment that can be put into use by the office's examiners right away. Also, this approach would make the automated search files available to members of the public sooner.

III. Analyze the hiring and compensation policies of the PTO to determine whether some categories of employees are being paid at rates higher than necessary.

The Patent and Trademark Office clearly needs authority to pay higher salaries for certain positions such as biotechnology patent examiners. On the other hand, it seems fair to ask whether salaries may already be higher than necessary in some areas, particularly for positions not requiring a science or engineering background, considering all factors including the high level of job security and other benefits of government employment.

IV. Study whether work rules in labor-management agreements at the Patent and Trademark Office, including the patent examiner production quota and bonus system, are impeding the ability to reduce spending and increase productivity.

We have mentioned the patent examiner production quota system in past testimony. Observers in industry and the patent bar have long questioned whether the production quotas as they are applied in the PTO are a barrier to having a professional work environment that is conducive to the highest possible quality and quantity of patent examining work. It is our understanding that the production quota system, including the so-called "gainsharing" program (see 1992 budget at page 29), currently gives almost automatic bonuses to nearly all

patent examiners. Given the rapidly escalating costs of operating the patent examining system, we believe it is timely to have an independent look taken at this system by some organization not associated with PTO management or PTO labor unions.

V. Study whether the extra layers of management and support staff proposed for patent examining and other operations in the 1992 budget will yield any benefits to users.

The 1992 budget appears to propose an unprecedented staff buildup in the PTO, adding 1,087 employees in 1992 to the 1991 total of 4,765. In 1992 the PTO would have 5,852 employees. The bulk of the new employees are for programs other than automation.

For example, the budget proposes an increase of 702 employees in the patent examining corps, not counting employees working on automation, a 22.6 percent increase in personnel to cope with an estimated increase in patent filings of 10.7 percent. At pages 35 and 43, for example, the budget lists large numbers of extra deputies, secretaries and other staff support for existing examiners and supervisors. While these employees may well be needed, it seems fair to ask whether an increase in productivity will result, and why these positions cannot be paid for out of savings from productivity increases.

VI. Investigate whether the PTO's liberal flexible working hours program for employees--under which large numbers of rather highly compensated full-time professional employees work only 4 days a week or work during hours that do not mesh with accepted business hours in the private sector--is impairing the ability of the PTO to serve the public most effectively at the lowest cost to users.

IPO's members from time to time have commented unfavorably about the effect of the office's flexi-time program on service to the public. An independent analysis of this issue would be timely.

PTO AS A GOVERNMENT CORPORATION

In 1989 IPO commissioned a report by the National Academy of Public Administration entitled "Considerations in Establishing the Patent & Trademark Office as a Government Corporation". That report recommended making the PTO a government corporation with more operating and financial flexibility than regular government agencies. According to the report, the PTO is well-suited for government corporation status because its expenses are supported primarily by user fee income.

A PTO government corporation might be able to operate more like a private business. The result could be more efficient and effective operations and better service to the public. A government corporation structure might also give the users of the PTO a voice in how the PTO is operated, which we believe is a legitimate objective.

A government corporation might have authority, for example, to borrow money. This could be the only practical way to obtain funds for a government-owned building for the PTO in the near future. Money also could be borrowed to finance other one-time capital improvements such as automating the search files. As noted, automation of search files provides no benefits to current patent and trademark applicants, and it is unfair to assess them the huge costs of the automation program.

Other possible benefits of government corporation status include: (1) greater authority to provide competitive salaries for certain specialized PTO employees who are in short supply, such as patent examiners in the field of biotechnology; (2) ability to hire additional employees quickly when patent or trademark filings increase; (3) an exemption from government-wide personnel ceilings and hiring freezes; and (4) an exemption from deficit reduction legislation such as the Gramm-Rudman-Hollings law.

Formulating legislation to make the PTO a government corporation would be a highly complex and time-consuming undertaking. Nevertheless, in light of the difficult fee and funding issues now facing the PTO, we believe it is an option that deserves serious consideration by the subcommittee.

SOVEREIGN IMMUNITY LEGISLATION

We would like to take this opportunity to express IPO's support for your recently introduced bills S.758 and S.759, which would amend the patent and trademark laws to make clear that state governments are

subject to suit in federal court for infringement and that all the remedies can be obtained in such a suit that can be obtained in a suit against a private party.

IPO supports early enactment of both S.758 and S.759. Congress passed similar legislation last year abrogating the sovereign immunity doctrine with respect to copyright law, making clear that state governments are subject to suit in federal court for copyright infringement. By enacting S.758 and S.759, Congress can now complete the job and make it clear that state governments are subject to suit in federal court to the same extent as private parties under all of the federal intellectual property statutes.

In the case of patent law, the need for the legislation is evident from two cases decided by the Court of Appeals for the Federal Circuit. Those cases denied remedies against state defendants because of the sovereign immunity doctrine. S.758 also covers the Plant Variety Protection Act, a specialized law administered by the Department of Agriculture to provide protection for plant varieties that is similar to patent protection. No eleventh amendment issues have arisen under the Plant Variety Protection Act to date, but we agree that that act should be amended now in order to avoid the possibility of eleventh amendment defenses in the future.

We also agree that amendment of the Trademark Act of 1946 is needed as proposed in S.759. A sovereign immunity defense has been raised in at least two cases under the Trademark Act of 1946. There is no policy reason under the Trademark Act for treating state government defendants different than private defendants.

We note one technical inconsistency between S.758 and S.759. In S.759 the language of the bill explicitly states that the remedies available in a suit against a state include injunctive relief. While we are sure the intent of S.758 also is to cover injunctive relief, injunctive relief is not expressly mentioned. We suggest that a reference to injunctive relief be included in S.758.

* * *

We appreciate the opportunity to present these views. I will be pleased to answer any questions.

IPO INTELLECTUAL PROPERTY OWNERS, INC.

1255 TWENTY-THIRD STREET, N.W.
SUITE 850
WASHINGTON, DC 20037
TELEPHONE (202) 466-2396
TELEX 248959 NSPA UR
FAX (202) 833-3636

PRESIDENT
Donald W. Banner
Washington, DC

VICE PRESIDENT
Richard C. Witte
Procter & Gamble Co.

DIRECTORS
Robert L. Andersen
FMC Corp.
Robert A. Armitage
Upjohn Co.
Norman L. Beamer
Union Carbide Corp.
Erwin F. Barrier, Jr.
General Electric Co.
William H. Dudley
Monsanto
Larry W. Evans
BP America
Michael W. Glynn
Ciba-Geigy Corp.
Gary L. Griswold
3M
Robert C. Kline
E.I. du Pont de Nemours & Co.
William E. Lambert, III
Rohm & Haas Co.
Edward T. Lentz
SmithKline Beecham Corp.
William F. Marsh
Air Products and Chemicals, Inc.
John F. McDonnell
AT&T
Alexander McKillop
Mobil Oil Corp.
Ralph Medhurst
Amoco Corp.
Ronald E. Myrick
Digital Equipment Corp.
Allen W. Richmond
Phillips Petroleum Co.
Gerard P. Rooney
Allied Signal Inc.
William E. Schuyler, Jr.
Washington, DC
Roger S. Smith
IBM Corp.
Richard G. Waterman
Dow Chemical Co.
Melvin P. Williams
United Technologies Corp.
Allen B. Wuchenich
Westinghouse Electric Corp.

EXECUTIVE DIRECTOR
Herbert C. Wamsley
Washington, DC

ASSOCIATE EXECUTIVE DIRECTOR
Ada B. Winter
Washington, DC

MEMBERSHIP CHAIRMAN
Isaac Fleischmann
Falls Church, VA

May 10, 1991

The Honorable Dennis DeConcini
Chairman, Judiciary Subcommittee on
Patents, Copyrights, and Trademarks
United States Senate
Washington, DC 20510

Dear Mr. Chairman:

Enclosed are our replies to the written questions from you and Senator Biden relating to the April 11, 1991 hearing on Patent and Trademark Office reauthorization legislation.

Thank you again for the opportunity to testify before your subcommittee. Please let us know if we can provide any additional information.

Sincerely,

Donald W. Banner

Donald W. Banner
President

May 10, 1991

REPLIES TO QUESTIONS TO DONALD W. BANNER BY SENATOR DENNIS DECONCINI FOR PATENT AND TRADEMARK OFFICE AUTHORIZATION HEARING ON APRIL 11, 1991

(1) Is the patent bar willing to delay patent automation or have a longer patent pendency period in exchange for lower patent fees?

IPO favors automating the patent search files as rapidly as automation can be accomplished in a cost effective manner. IPO would not object to reasonable delays in the current automation project for the purpose of evaluating whether the project is headed in the proper direction. It may be appropriate to reduce the office's 1992 automation budget while the project is reevaluated, and concentrate efforts in the short term on utilizing inexpensive, off-the-shelf equipment such as personal computers and CD-ROM's. We would also support using borrowed money to pay for automation. This would be a way to lift the fee burden from the backs of current users who receive no benefits from automation and who should not be expected to pay for it.

IPO is generally in favor of short patent pendency periods, but would not object to a more flexible approach to controlling pendency. Short pendency is especially important for certain industries and certain patent owners. Biotechnology and industrial designs are two areas where pendency needs to be shortened. On the other hand, some slippage in current patent application pendency times could be tolerated in many fields of technology, in order to reduce PTO spending levels temporarily and enable a slower, more orderly build-up of the size of the examining staff.

It must be kept in mind, of course, that spending reductions obtained by allowing pendency to rise cannot be kept in place indefinitely. There are limits on how much pendency can be permitted to rise. As soon as those limits are reached, the PTO will have to resume examining as many cases as it receives each year.

(2) In your testimony you state that "many observers in industry and the patent bar believe the Patent Office should utilize less expensive equipment that can be put into use by the office's examiners right away." Could you further explain what this less expensive equipment is?

One possibility would be use of personal computers equipped to read CD-ROM's. The PTO could purchase a personal computer for every patent examiner for a small fraction of the projected

QUESTIONS BY SENATOR DENNIS DECONCINI

annual cost of the Automated Patent System. We think it would be cost effective for the PTO to invest in CD-ROM's containing patents arranged according to the PTO's subject matter classification system and covering a substantial portion of the "backfile" of patents issued in previous years. Not only would the CD-ROM's be useful to patent examiners, but they would facilitate searching by members of the public, who are supposed to be the beneficiaries of information in the patent search files. Senator Roth recently has introduced a bill, S.721, to require that patent information be made available by the PTO on CD-ROM's. We believe Senator Roth's bill deserves careful consideration.

Another possibility may be to modify the plans for deployment of the Automated Patent System (APS) so that the APS equipment does not have to make available on-line all patents in all fields of technology. Examiners searching in a particular technology do not need access to all 5 million patents.

(3) IPO proposes that there be an analysis of the hiring and compensation policies of the Patent Office to determine whether some categories of employees are being paid at rates higher than necessary. Based on your experience as Commissioner, could you tell the subcommittee which categories of employees IPO believes are being paid at rates higher than necessary?

An analysis of hiring and compensation policies is one of several steps that could be taken to insure tight control over spending. It is our impression, shared by many observers in the private sector, that the Executive Branch's hiring and compensation policies for many years have been rigid and mechanistic. Efforts have been made to improve Executive Branch hiring and compensation policies since I served as Commissioner in 1978 and 1979, but as far as I know the policies are not fundamentally different than they were then.

For example, the Patent and Trademark Office has had great difficulty obtaining authority to pay salaries higher than the standard government entry level rates for biotechnology patent examiners. This illustrates the inflexibility in the federal salary schedule that makes it difficult to pay high enough entry level salaries for certain employees. The PTO also has had difficulty in some situations paying high enough salaries to attract or retain experienced patent and trademark attorneys with top credentials. The PTO needs hiring and compensation flexibility similar to that enjoyed by the private sector.

QUESTIONS BY SENATOR DENNIS DECONCINI

I offer the following impressions concerning PTO compensation policies that may be causing some PTO employees to be paid at rates higher than necessary:

(A) The average PTO employee still enjoys greater job security, flexibility in working hours, and vacation and retirement benefits than the average private sector worker, and this fact needs to be considered in determining compensation levels;

(B) Grade and step raises that many employees seem to receive virtually automatically result in some categories of Patent and Trademark Office employees, especially those who are not patent or trademark attorneys, reaching salary levels after several years that are substantially higher than the employees could command in private sector jobs if they left the PTO; and

(C) Improved performance by career managers and supervisors is not expected, as far as I know, in return for salary increases such as the recent senior executive increases that exceeded 20 percent, and, unless the situation has changed recently, firings and demotions of career managers and supervisors for lack of performance are virtually unheard of in the PTO and throughout the Executive Branch.

(4) Your organization is opposed to shortening the period for advance notice by the Patent Office in the Federal Register from 60 days to 30 as proposed by the Administration. Isn't 30 days the norm prescribed in the Administrative Procedures Act for all other Federal Agencies in their rule making procedures. Why do patent practitioners and inventors need more time than other members of the public?

Thirty days is the minimum time prescribed in the Administrative Procedure Act for other federal agencies in their rule making procedures. In practice many federal agencies provide lead times far longer than 30 days because of the need for the public to have time to implement rules.

In the case of the Patent and Trademark Office, we believe 30 days from Federal Register publication is not enough time for members of the public to receive word of new fee schedules and change their office procedures. Very few patent practitioners or inventors subscribe to or read the Federal Register on a regular basis. They learn about new fee changes from special PTO notices, trade and bar association publications, and other sources. Fee

QUESTIONS BY SENATOR DENNIS DECONCINI

changes are not published in some of these sources for many days after notice in the Federal Register. When Congress enacted the current 60 day advance notice requirement, it thought more than 30 days was needed, and we still think that need exists. We do understand why PTO fee increases cannot be scheduled so that the burden on the PTO's users is minimized.

(5) Do you have any members who qualify for the small entity exemption (companies with less than 500 employees)?

A substantial majority of IPO's members are large entities, but we do have members who are independent inventors, small businesses with fewer than 500 employees, and universities. We believe the Administration's proposed reauthorization legislation will have an adverse impact on both our small entity members and our large entity members.

REPLIES TO QUESTIONS POSED TO DONALD W. BANNER BY SENATOR JOSEPH R. BIDEN, JR. FOR PATENT AND TRADEMARK OFFICE AUTHORIZATION HEARING ON APRIL 11, 1991

(1) Reports indicate that many American industries are slipping in comparison to their foreign competition in innovativeness. Do you believe that, in several technologies important to the future of the American economy, we are slipping behind our competitors? If so, what would you recommend the federal government do to reverse that trend?

Although America overall is still the world leader in invention and innovation, I agree that we are slipping behind our competitors in several technologies important to the future of the American economy. The federal government can take action in a number of areas to reverse this trend, including science and engineering education, tax policy, and possibly direct federal funding of certain research and development. The subject within the expertise of IPO, of course, is intellectual property protection. We believe the federal government should continue to work vigorously to put into place laws, regulations, and treaties that will ensure adequate and effective legal protection in the United States and abroad for new technology developed in America. Patent and Trademark Office costs should be kept low in order to help encourage the high risk investments in commercial development that are necessary to bring new products to market. Education of students and the general public about the benefits of intellectual property protection also would be useful.

(2) What are your thoughts on federal assistance for emerging or pre-competitive technologies? What is the proper form, if any, that federal assistance should take to help these domestic industries develop?

Federal subsidization of research and development should be approached cautiously. In general, the federal government should strive to create an environment in which private inventors, companies and investors find it financially rewarding to create and commercialize new technologies. Federal grants and subsidies are not a substitute for the free enterprise system, but may be a useful supplement to it in particular cases.

(3) What is your assessment of the research and development capability in our country? Are our nation's laboratories still on the cutting edge or have they slipped in recent years? What steps should the federal government take to develop a strong research and development capacity in our country?

QUESTIONS BY SENATOR JOSEPH R. BIDEN, JR.

The nation's laboratories are still on the cutting edge in many fields, particularly in basic science, but our foreign competitors have begun to catch up. As noted above, the federal government should take all possible steps to create an environment that will attract investment in creation and commercialization of new technology. Strong support for excellence in science and engineering education also is essential. Laws protecting patents, trade secrets and other forms of intellectual property need to be reviewed and improved continuously to ensure the best possible environment for research and development in our country. The essence of the matter is to ensure strong incentives for investment of high risk capital in development and commercialization of products that can be patented.

(4) Are there problems in making the jump from research in American laboratories to development of a product? What is your assessment of industrial parks that bring together the research capability of universities with the development capabilities of industry? Are these something the federal government should encourage?

It almost always requires substantial additional effort and capital to develop a product after an invention has been made. The problems that exist in making the jump from research in American laboratories to development of a product differ according to the type of laboratory. Laboratories in industry generally are in close touch with people in the company who will work on product development. Most of the R&D performed by IPO's members is within companies. We are less familiar with other R&D settings, but it is our impression that industrial parks are valuable for bringing together the research capability of universities with the development capabilities of industry. IPO's members are interested in cooperative arrangements with universities. The federal government can promote university-industry cooperation by ensuring that laws relating to intellectual property provide the necessary incentives for R&D and commercialization.

(5) It has often been noted that some inventors have difficulty in getting their inventions to market. What are some of the hurdles American inventors face? What changes would you recommend to aid those inventors in developing inventions or in getting them to market?

We are most familiar with the hurdles that relate to obtaining and maintaining intellectual property protection. One hurdle is the expense of patenting.

QUESTIONS BY SENATOR JOSEPH R. BIDEN, JR.

We oppose the Administration's proposal for a 91 percent increase in the fees for a small inventor to file for and issue a patent and maintain it throughout its life. The Administration's proposal to continue to subsidize the filing fee for small inventors is inadequate. Inventors often need years after the patent is obtained to realize success in licensing or manufacturing an invention. An inventor is likely to become discouraged if faced with high government fees for maintaining a patent in force while attempting to license or manufacture. High fees for maintaining patents will cause inventors to drop efforts to commercialize some promising inventions.

In some fields, short patent pendency is very important for marketing inventions. Prompt patenting may put inventors in a better position to attract capital for high risk development and manufacturing, or to obtain licensees who are willing to take the necessary risks to develop and manufacture the product.

Senator DECONCINI. Thank you, Mr. Banner.
Mr. Lee.

STATEMENT OF JEROME G. LEE

Mr. LEE. Thank you, Mr. Chairman. My name is Jerry Lee. I am president of the American Intellectual Property Law Association. We are a specialized bar association with about 6,500 members, and we represent all these people that you have been talking about—the large entities, the small entities, the individuals. We represent the users of the Patent Office system.

Before I make some specific comments, I would like to salute the Patent Office, and particularly Commissioner Manbeck. The things I am about to say should not be a reflection on him or his assistants. They have done a wonderful job in running the Patent Office in many ways. We share with them the common goal of a strong patent system.

Just to give them a little praise, and some of the other people, I would just like to call your attention to the fact that they have cooperated with the European Patent Office and the Japanese Patent Office to obtain the high-technology base of those two countries at very little cost to the United States. They have brought it over here to the United States and incorporated it in our own database, so that we have a tremendous natural resource here in the United States on which we can build.

They have done that all on their own—Harry Manbeck, Brad Huther, Jim Denny, Tom Giaimo—and they deserve praise for that because they have been acting as great public servants in a fine tradition.

As far as the current situation is concerned, I can only echo your own statement that you made at the beginning of this hearing. The new fees are enormous; there is a 69-percent increase. From a user's point of view, they are very dramatically increased. The effect necessarily will be to discourage some people from participating in the patent system, people who can't afford it.

The effect on jobs in the country—the creation of new jobs and new opportunities may be affected by such high fees because there comes a time when fees are counterproductive. They don't help the country when they get so high that people can't participate, and that is a very big concern of the users.

So our primary recommendation is that the committee very carefully review the requests of the Patent Office, not only in the current year, but for the next year and the year thereafter. As you pointed out, they are going to jump from—I think it was $321 million in the current budget. They are going to jump to approximately $461 million in 1992, and about $555 million in 1993. That is enormous; that is absolutely a tremendous percentage increase.

Now, we ourselves have little opportunity to participate in the cost-setting mechanisms of the Patent Office, and what their goals and how they are going to do things. One of the things we are taking a good look at is the thought of converting the Patent Office into a government corporation so they could have a board of directors over there like a public service commission that would represent users.

We might have some people on there who could help the Patent Office set long-term goals. There may be many advantages. The Commissioner might serve, for example, longer than the current term. The average Commissioner sits over there in the Patent Office only 2, 3 years. Maybe we could do something along those lines to make it into a more productive and efficient operation.

As far as the specifics are concerned, we agree with the statement that you made earlier. We don't think the small entities should have their costs jacked up. They are the ones who should be encouraged the most by our patent system because the small entities, the universities, are the ones who tend to create jobs.

We think, as you suggested, things should be left as they are. The system is working very well the way it is now, and we would not recommend that that idea of jacking up the small entity fees should be followed. We think it would be a mistake.

There are two other suggestions in this authorization bill. One is the suggestion to turn things into profit centers. section 4(a) would enable the Patent Office to make charges for things like copies of patents—jack up those charges to $40, $50, something like that, out of connection with the actual cost. We don't think that is a good idea. We think there should be a reasonable relationship between the cost of a Patent Office service and the charge.

The last item they have asked for that we disagree with in this authorization bill is the right to take all their trademark fees and use them for any purpose whatsoever. We think that, too, would be unwise. We think that the use of trademark fees should be restricted to the purpose that the trademark applicants came in there for, and that is trademark operations.

Thank you very much. If you have any questions, I would be glad to respond.

Senator DECONCINI. I will, Mr. Lee, but I will let Mr. Smegal go ahead now.

[The prepared statement of Mr. Lee and written questions and answers follow:]



AMERICAN INTELLECTUAL PROPERTY LAW ASSOCIATION
2001 JEFFERSON DAVIS HIGHWAY, SUITE 203, ARLINGTON, VA 22202

Telephone (703) 415-0780
Facsimile (703) 415-0786

STATEMENT OF

JEROME G. LEE, PRESIDENT

AMERICAN
INTELLECTUAL PROPERTY LAW
ASSOCIATION

BEFORE THE

SUBCOMMITTEE ON PATENTS, COPYRIGHTS
AND TRADEMARKS

COMMITTEE ON THE JUDICIARY

UNITED STATES SENATE

APRIL 11, 1991

ON THE

AUTHORIZATION OF THE PATENT AND
TRADEMARK OFFICE

Formerly AMERICAN PATENT LAW ASSOCIATION (APLA)

I am Jerome G. Lee, the President of the AIPLA, and on behalf of our members, I thank the Subcommittee for the opportunity to testify today on the authorization of the Patent and Trademark Office.

The American Intellectual Property Law Association (AIPLA) is a national society of more than 6,500 lawyers engaged in the practice of patent, trademark, copyright, licensing, and related fields of law affecting intellectual property rights. AIPLA membership includes lawyers in private, corporate, and government practice; lawyers associated with universities, small business, and large business; and lawyers active in both the domestic and international transfer of technology.

* * * *

The enactment of the Omnibus Budget Reconciliation Act of 1990 (P.L. 101-508) on November 5, 1990 was a highly controversial development for Americans who use the services of the Patent and Trademark Office (PTO).

The Budget Reconciliation Act increased statutory patent fees by 69%. Moreover, it was done without notice and, in a practical sense, retroactively for many applicants and patent owners. This significant fee increase applies not only to the fees for prosecuting a patent application but also for maintaining a patent in force. For this reason, it will discourage filings of patent applications and cause some patent owners, especially those who can least afford it, to abandon existing patent rights.

A second effect of the Act was the mandate that, henceforth, the PTO must operate without appropriations and will be wholly dependent on user fee income to support its programs. This circumstance makes financial planning difficult since the PTO can only estimate what income it will receive. Due to the fact that PTO budgets must be approved within the Executive Branch years ahead, the PTO has little flexibility to match its program

levels with actual revenues or even to reliable revenue forecasts.

The authorization bill and the administration budget request for the PTO for fiscal years 1992 and 1993 demonstrate the magnitude of this problem. In the immediate wake of the 69% fee increase, good judgment would dictate that the PTO restrain increased spending to take into account how these new fee levels will affect fee income in the near term. But since the PTO does not have the ability to deviate from Commerce Department goals nor the ability to alter its budget plans for fiscal years 1992 and 1993, it has no option but to proceed with current operational plans, devise ways to significantly increase user fees, and hope that Congress approves.

Our hope is that Congress recognizes that it is not in the public interest to discourage use of the patent laws by charging burdensome fees as Congress has recognized in the past. Our primary recommendation to this subcommittee, in light of the 69% increase in fees imposed only five months ago, is to review and restrain PTO spending plans in fiscal years 1992 and 1993 to the maximum extent that is prudently possible.

The budgets for FY 1992 and FY 1993 illustrate the difficulty of the PTO in matching revenue and forecasts. We understand that those budgets are based on patent and trademark application filing projections which the PTO now concedes are overestimated. The FY 1992 and FY 1993 budget levels were based on projected increases over an expected FY 1991 workload of 179,000 patent applications and 132,000 trademark applications. However, we understand that actual FY 1991 patent filings are now expected to be in the 165,000-170,000 range and trademark applications in the 115,000 to 120,000 range. Moreover, as the effect of the 69% fee increase takes hold, even the revised patent application projections for FY 1991 may be overstated.

The current PTO proposal is to increase "small entity" applicant fees by a further 86%. Small entities file 44% of all U.S. origin applications, and 34% of all applications. This added fee increase probably will further reduce filings in those years, thereby making the workload projections underlying the FY 1992 and FY 1993 budget requests even more overstated and unreliable.

Rather than revise the budgets downward, the PTO is proceeding on its original course, so that, in effect, that Congress is being asked overfund FY 1992 and FY 1993 spending.

When PTO user fees were significantly increased in 1982, Congress was sensitive to the dangers of allowing PTO fees to increase precipitously to counterproductive levels. Congress imposed a number of statutory restraints on the ability of the PTO to increase fees and spend fee income. Several of those restraints were overridden by the Budget Reconciliation Act of 1990. For example, the statutory restriction on the use of fees for the automation program was abolished. The authorization bill now requests that statutory restraints again be either overridden or abolished.

As the subcommittee knows, the PTO budget request is for $461,800,000 in fiscal year 1992 and $554,900,000 in fiscal year 1993. Everyone should agree that these requests are enormous compared to the current budget of $321,000,000. They represent an increase in user fee income of $315,000,000 during FY 1992 and FY 1993 on top of the $100,000,000 increase in the current year. The PTO position is that the spending levels funded by these increased fees are "essential".

The issue for this subcommittee is to carefully consider and balance what the PTO terms "essential" for its needs against the broader public interest. Withdrawing taxpayer support of the PTO and shifting the financial burden to users of the patent and trademark

laws may not necessarily be in the interest of the public which benefits from the use of these laws particularly where the spending levels are rapidly escalated. Certainly, it was not the intent of Congress in enacting the Budget Reconciliation Act of 1990 that user fee supported agencies were now free to dramatically increase spending because the federal government deficit would not be directly affected.

Our statement today is made to assist the subcommittee. We will offer our opinions on the current PTO goals because they are expressed in the requested budget levels. We will also offer our views on several specific provisions of the authorization bill.

* * * *

At the outset the subcommittee should recognize that neither the AIPLA nor any other organization which represents users of the PTO services can provide a detailed evaluation of the proposed PTO budgets and whether the increases in manpower and new spending authority are "essential", cost effective or justified. This is because the present system provides little or no opportunity for user participation or contributions to formulation of PTO the goals and budgets. PTO goals and budgets are determined by the Commerce Department and the Office of Management and Budget without user input.

The Congress has the responsibility to enact the patent and trademark laws and ensure, by oversight, that those laws are properly administered and that their purposes are being met. The PTO has the responsibility to properly administer those laws. The users of PTO services, which are the users and owners of patents and trademarks, are in an excellent position to know if Congress and the PTO should change or adjust course. There should be a way in which these three logical parts of the decision making process can work together to set PTO goals and formulate budget plans which best promote our patent system and trademark system.

The AIPLA, the Intellectual Property Owners, and the Patent, Trademark, Copyright Law Section of the American Bar Association have begun to study whether the PTO should be established as a government corporation. One feature of such a reorganization would be to ensure that a formally designated board or advisory committee comprised of representatives of users of the PTO services had a statutory responsibility to fully participate in establishing PTO goals and budgets.

In the future, this subcommittee will continue to authorize PTO spending and will continue to exercise oversight on the administration of the patent and trademarks laws. The Appropriations Committees will continue to approve PTO spending levels, albeit that they are funded by user fees. In our opinion, the ability of Congress to meet its responsibilities regarding the PTO would be significantly enhanced if a statutorily authorized group of patent system users were able to offer to Congress an informed analysis of all aspects of the PTO operation. This could be done within the framework of the PTO if it were changed to a government corporation.

* * * *

Since 1982, the PTO has been directed by the Department of Commerce to meet two goals for the patent operation: First, to issue patents in 18 months on average, and second, to apply automatic data processing technology to all operations.

In fact, the PTO has been attempting to meet the 18-month pendency goal for patents since the early 1960's. The goal was achieved in 1976, 1989, and 1990. The "automation" goal is also not new. In the early 1970's, the PTO attempted an ambitious automation project which was not successful and was abandoned. The 1982 automation goal was scheduled for completion in 1990. Our understanding of the current schedule is that the automation plan will be achieved sometime in the late 1990's.

The AIPLA last testified before this subcommittee on the operation of the PTO on February 17, 1987. At that time, PTO automation as to computer searching of the optical image patent database was entering a limited test of a single group of examiners. We understood that this test would be used to evaluate the production, quality and cost effectiveness characteristics of searching on the computer system. After four years, a second group of examiners is now testing the system and the testing will be expanded to a third examiner group soon. The plan is to begin deployment of the search system to the entire examiner corps in FY 1992 and FY 1993. Some time after that the public will gain access to the system.

The AIPLA has a number of significant disagreements with the manner in which the PTO is pursuing the automation program. The points of disagreement include the high costs of the system when far less expensive and reliable alternatives exist, and the refusal by the PTO to provide public access in the near future to the search database in the public search room and in private sector places of business.

In this regard, we urge the subcommittee to take note of S.721, the "Patent Information Dissemination Act of 1991", introduced by Senator Roth on March 22, 1991. The bill would require the PTO to allow the public to have access to the PTO patent image database in the near future. The purpose of the bill is to stimulate and assist innovation in the United States, as the European Patent Office and Japanese Patent Office are doing for their private sectors. We will communicate to the subcommittee the full details of why AIPLA strongly supports S.721 in the very near future.

In February, 1987, we were optimistic that the PTO recognized that the 18 month patent pendency goal, and the production quotas for examiners that go with it, needed to be supplemented with programs to increase the "quality" or validity of issued patents. As

we reported then, the PTO had begun a "quality reinforcement" program and AIPLA was fully cooperating with those efforts. 18-month patent pendency is is desirable. However, patent applicants are far more interested in the quality of the examination process and the ultimate validity of issued patents. A quick invalid patent is of no value. Unfortunately, our optimism about the prospect of increased patent quality was misplaced. To our knowledge, the quality reinforcement program was not implemented.

The AIPLA supports the principle that patents should issue promptly but only so long as all reasonable steps are taken to insure the effectiveness of the examination process and the quality of issued patents. Between rapid issuance and quality, quality should prevail. It is not essential that patents issue in 18 months on average.

The AIPLA also supports "automating" PTO operations. However, it is not essential that the system be deployed to the examiners during FY 1992 or FY 1993. Delaying heavy PTO investment in computer machinery will have no negative impact on the patent system.

Authorization Bill

Section 4(a)

The Administration proposal is to eliminate all restraints on the PTO in establishing fee levels for processing, services, or materials relating to patents provided to the public. Under current section 41(d) of title 35, the PTO may only recover in fees "the estimated average cost to the Office" of providing the service such as selling patent copies or recording assignments. The authorization bill would instead connect such fee levels to the "estimated cost of the operation of the Patent and Trademark Office." Therefore, these services could become "profit centers", the amount of the profit would be wholly in the discretion of the PTO, and the fees could be increased at any time.

It is our understanding that the PTO plans to increase these section 41(d) fees by 175%. We recommend the subcommittee ascertain the dollar amount per year of the cost of this amendment. Our best estimate is that this would increase user costs by between $15,000,000 and $20,000,000 per year.

Our recommendation is that this proposed amendment be modified. As a matter of principle, users should pay fees to recover the cost of what they request. Patent applicants should pay for the cost of prosecuting their application. If a member of the public wants to purchase a patent copy, the fee should be what it costs to provide it. It is very important that the fee remain connected to the cost of providing the service.

The problem caused by the Budget Reconciliation Act is that users of PTO services are required to pay for PTO costs which are not directly connected with what they request. These costs include legislative, international, and outreach programs. These indirect costs total approximately 18% of the PTO budget. Also, the patent automation program is very costly although users do not have access to it. The automation costs not attributable to examination are currently approximately 20% of the PTO budget.

We believe it would be justifiable to spread out to all users the 38% cost of PTO operations which are not directly attributable to any user request. This could be done by imposing a 38% surcharge on all Section 41(d) fees under current spending conditions.

Therefore, we recommend that the subcommittee retain the principle underlying the current law that the fee for receiving a service from the PTO be directly connected with the cost of providing that service. Further, that a surcharge percent be added to each Section 41(d) fee to cover PTO costs not directly attributable to user requested services.

Section 4(d)

Patent fees were significantly increased in 1982. The principle underlying the increase was that patent applicants should pay in fees the entire cost of examining applications and issuing patents. The immediate financial impact on applicants was softened by establishing maintenance fees to keep prosecution fees as low as possible. At that time, Congress provided in the PTO authorization bill (P.L. 97-247) that independent inventors, small businesses, and non-profit institutions should only be required to pay for 50% of the cost of processing their applications.

The justified sensitivity of Congress to the negative impact of high patent fees was stated as follows in S. Rept No. 99-305 which accompanied the PTO authorization bill of 1986:

> With respect to setting the fee level, this Committee recognizes that it is not in the public interest to discourage the use of patent and trademark laws by charging burdensome fees. The cost recovery schemes must always be balanced by the effect fee increases will have on the number of patent applications. The Committee notes that this concern is consistent with prior congressional actions. With respect to patents, Public Law 97-247 increased the fees to recover the costs of patent processing except for "... the fees for individuals, small businesses and nonprofit inventors," which were reduced by half in order not to discourage the use of the patent system by these inventors.

These public interest policy decisions were overridden by the Budget Reconciliation Act. Congress did retain the concept that small entities should pay 50% of the fee levels of large entities. However, instead of taxpayer support for reducing the negative impact of fees on small entity inventors, those costs were passed on to large entities.

The AIPLA opposes the principle that any member of the public should be required to pay fees for government services which are higher than the costs of providing the service. Requiring any patent applicant to pay patent fees set to recover more than 100% of the cost

of processing the application amounts to a punitive tax on using the patent laws. The Administration opposes this and we concur.

The subcommittee should not believe that large entities will readily pay whatever costs are associated with obtaining patents. Large entities are extremely cost concious. Their increases in patent fees are magnified because large entities may file scores or hundreds of applications each year. When large research based corporations cut back on patenting, the public benefits of the patent system are particularly affected negatively because disclosure of inventions from these sources may be of significant interest. Large entity patent fees have increased more than 3,800% in the past nine years and further increases are not in the public interest.

Section 4(d) of the authorization bill would eliminate the lesser fees paid by small entities with the single exception of application filing fees. From 1982 to 1990, statutory patent fees for small entities increased 1,066% from approximately $177 per patent to $2,065 per patent. On November 5, 1990, small entity fees were increased 69% to $3495 per patent. The effect of the amendment proposed in Section 4(d) would be to increase small entity fees 86% to $6520 per patent. If accepted, this proposal would mean that small entity fees would have been increased 3500% since 1982, and 200% between November 5, 1990 and October 1, 1991.

In our opinion, the November 5, 1990 increase in fees will cause a decrease in patent application filings and an increase in abandonment of patent rights by small entities, and most particularly independent inventors. The proposed amendment to Section 41(h) of title 35 will significantly exaggerate that negative result. Small entities file nearly 44% of a U.S. origin applications. As they are forced out of the patent system, the costs for those who continue in the system will increase. This is a highly counterproductive cycle.

It may be that by enacting the Budget Reconciliation Act, Congress has deprived itself of the ability to act in the best interest of patent system and the public. We hope that this is not true. We recommend that small entity patenting be funded by the public through appropriations. This would conform to congressional decisions since 1982. The patent system provides significant public benefits which fully justify modest public support.

Section 4(f)

The proposed amendment to Section 42(c) of title 35 would remove the existing requirement that trademark fees shall be used "exclusively" for the trademark operation. Instead, trademark fees could be "reprogrammed" for "other purposes". What those "other purposes" might be is unknown to us.

We object to the proposed amendment. Current Section 42(c) is fair and straightforward. Trademark applicants should only be required to pay fees to fully fund the trademark operation. To the contrary, the purpose of the amendment is to require trademark applicants not only to pay for the entire trademark operation but also pay the costs of other functions within the PTO or, perhaps, the Department of Commerce. In other words, the trademark operation would become a "profit center" to generate funds for things other than trademarks.

We would support a surcharge on trademark fees to recover the 18% of the PTO budget which funds costs not directly attributable to the request of any user. This coincides with our position on increasing Section 41(d) fees. Of course, the additional 20% of the PTO budget devoted to patent automation should not be added to trademark fees.

* * * *

Attached is a table showing the recent increases in statutory patent fees.

This completes our statement. I would be pleased to answer any questions the members of the subcommittee may have.

Patent Fees (Sec. 41(a) and 41(b))

	Small entity				Large entity		
	1982	1990	11/5/90	Current Proposal (eff.10/1/91)	1990	11/5/90	Current Proposal (eff.10/1/91)
Filing	65	185	315	315	370	630	NC
Issue	100	310	525	1050	620	1050	NC
Pros. Fees (est.)	12	90	155	155	180	310	NC
	$177	$585	$995	$1520	$1170	$1990	
Maintenance							
1st	--	245	415	830	490	830	NC
2nd	--	495	835	1670	990	1670	NC
3rd	--	740	1250	2500	1480	2500	NC
	$177	$2065	$3495	$6520	$4130	$6990	$6990

% of increase

	1982-1990	1990-1991	1982-1992	1991-1992	1990-1992
Small Entity	+1,066%	+69%	3,583%	86%	203%
Large Entity	+2,233%	+69%	3,845%	--	69%

AMERICAN INTELLECTUAL PROPERTY LAW ASSOCIATION
2001 JEFFERSON DAVIS HIGHWAY, SUITE 203, ARLINGTON, VA 22202

Telephone (703) 415-0780
Facsimile (703) 415-0786

May 14, 1991

President
JEROME G. LEE
President-Elect
I. FRED KOENIGSBERG
First Vice-President
WILLIAM L. LAFUZE
Second Vice-President
GARY L. NEWTSON
Secretary
ROBERT J. BERNSTEIN
Treasurer
KENNETH E. KROSIN
Immediate Past President
WILLIAM S. THOMPSON

Board of Directors
The Above Persons and
GARY A. SAMUELS
ROBERT G. STERNE
HOGE T. SUTHERLAND
JANICE E. WILLIAMS
DONALD S. CHISUM
WALTER N. KIRN
DON W. MARTENS
RICHARD C. WITTE
RONALD B. COOLLEY
ROBERT W. SACOFF
SUE Z. SHAPER
ROGER S. SMITH

Councillman to NCIPLA
DAVID A. ROSE

Executive Director
MICHAEL W. BLOMMER

Honorable Dennis DeConcini
Chairman
Subcommittee on Patents, Copyrights
and Trademarks
United States Senate
Committee on the Judiciary
Washington, DC 20510-6275

Dear Senator DeConcini:

Enclosed are answers to questions to the AIPLA you raised subsequent to the April 11, 1991 hearing on the Patent and Trademark Office authorization bill.

We must delay answering question 2. The AIPLA believes the automated patent search system (EPOQUE) now being deployed by the European Patent Office is reliable and far less expensive than the APS which the USPTO will deploy in the future. The USPTO disputes our statement as to the cost relationship between EPOQUE and APS. We are meeting tomorrow with the USPTO on this matter, and, will answer question 2 as soon as possible.

Regards,

Sincerely,

Michael W. Blommer
Executive Director

MB/jac
Enc.

AMERICAN INTELLECTUAL PROPERTY LAW ASSOCIATION
2001 JEFFERSON DAVIS HIGHWAY, SUITE 203, ARLINGTON, VA 22202

Telephone (703) 415-0780
Facsimile (703) 415-0786

1. The primary recommendation in your testimony is that, in light of the fee increase, the Patent Office should restrain its spending plans to the next two fiscal years to the maximum extent that is prudently possible. I do not find, however, any specific suggestions for how this restraint on spending is to be accomplished. Could you outline for me the programs that you would cut back or eliminate to restrain spending?

1. (answer)

The association testimony identified two USPTO programs which are very significant to the proposed FY 1992 and FY 1993 budgets. The programs are the 18-month patent pendency goal and the Automated Patent System (APS). As our testimony indicated, if average patent pendency is not maintained at 18 months and if the APS is not deployed during FY 1992 and 1993, there will be no negative impact on U.S. patentees or the patent system as a whole. Comments on both follow.

At the outset, we reiterate the fact that the association is not capable of providing a specific dollar figure to any decision to restrain spending. And, of course, we have very little information about the FY 1993 budget request. The proposed FY 1992 budget requests the largest one year increase in funding and manpower in the history of the PTO. This budget is a combination of a multitude of decisions to make increases in virtually every phase of PTO activity. No one in the private sector took part in any of those decisions. The AIPLA does not have the information necessary to make an evaluation of this budget request and provide a detailed analysis of what increases should be restrained. We can only offer our general views on the largest two components of the budget request. As we pointed out in our statement, if the PTO was a government corporation with an institutionalized public advisory committee, detailed budget information, and the private sector analysis of the information, would be readily available.

Maintaining the 18-month pendency goal requires an estimate of the number of patent applications which will be received and hiring a sufficient number of examiners to process that many applications within 18 months. As our testimony indicated, and as you know, the FY 1992 application rate estimate is very likely excessive. That is because the estimate is based on an increase in filings over an expected number of filings in this fiscal year which has proven to be too high. The FY 1991 estimation was made before the imposition of the November 5, 1990 69% increase in patent fees.

Formerly AMERICAN PATENT LAW ASSOCIATION (APLA)

The FY 1992 budget proposal requests funds to hire 575 patent examiners to offset 280 examiner attritions for a net increase of 295 examiners. The cost increase will be $20 million in FY 1992. With every examiner position increase, there is an accompanying increase in support personnel, furniture, office space rental, and supplies. The budget submission requests an increase of 181 clerical positions to support the new examiner hires at a cost of $7 million. We do not know the dollar amount of the other related cost increases. Obviously, the FY 1992 positions will be carried over through FY 1993 at a cost that will exceed $27 million, because of among other things, cost of living pay increases. Therefore, pursuing the 18-month pendency goal will increase the FY 1992-1993 office costs at least $54 million. Since the Office projected filing increases in FY 1993, we assume the FY 1993 budget request will contain requests for net increases in examiner manpower and supporting personnel. The cost of such increases is not known to us.

One option the Committee could consider is to direct the Office to maintain the patent examiner corps and support staff at FY 1991 levels. That would produce a significant cost savings. That decision would have no negative effect on the quality of issued patents. If patent applications do not increase during FY 1992 and FY 1993 there would be no effect on patent pendency time. If applications do increase, patent pendency time would also increase. This latter possibility is acceptable to the AIPLA.

Commissioner Manbeck testified that overestimating examiner manpower needs is a "self correcting" problem. That is if applications do not meet projections, the Office would not hire examiners which are authorized to be hired because the lack of income would force that. From the point of view of maintaining the 18 month pendency goal, this is very true. However, to provide the Commissioner with this flexibility to assure the 18-month pendency goal, fees must be increased. If filings decline or even remain flat over FY 1991 levels, the fees will not go down or "self correct" in FY 1992 and FY 1993. It seems to us, the most prudent course of action is to keep fees as low as possible so as not to discourage filings.

The Automated Patent System (APS) has been under development since 1982. The APS has two parts; one to allow computer searching of prior art, and one to allow the electronic filing and processing of patent applications. The latter part of APS is only now being developed and has not reached the testing phase. The computer searching part of APS has been in the testing phase since 1989.

The PTO intends to begin deployment of APS throughout the examiner corps and to the public in FY 1992 and FY 1993. This is an extremely expensive system. Maintaining the system as is will cost $63 million during FY 1992 and FY 1993. The decision to deploy the APS will cost an additional $32 million in FY 1992 and $57 million in FY 1993 for a total of $89 million. This is a very heavy financial burden

to place on users in a very short period, especially since user fees were just increased 69%. As the association statement to the committee said, if deployment of APS were delayed, there would be no negative impact on patent applicants during FY 1992 and FY 1993.

3. You have expressed considerable concern about the magnitude of the fees the Patent Office now charges for a patent. But what is the "total" cost of obtaining a patent. That is, what percentage of the total cost of obtaining a patent would be Patent Office fees and what percentage would be patent attorney fees? Have the fees that Patent attorneys charge inventors risen over the last few years. Has your association ever surveyed your members on patent legal fees and its affect on patent filings?

3. (answer)

The association surveys members every two years on the economics of legal practice. That survey contains questions on charges for services to patent applicants. The survey for 1990 is not completed, and so the most recent data is for 1988.

First, the survey on charges for services only includes members in private practice. We have no data on the costs of corporate legal services to employees of that corporation. Second, the costs associated with patenting is highly uneven depending on variables including the location of the attorney, whether the invention is simple or complicated, and whether it is mechanical, electrical or chemical. Patent applications range from several pages to several hundred pages in length. Some patent applications are prosecuted successfully in a relatively short period of time and some require many years of attention. Generally speaking, complicated inventions in fields of chemistry or electronics tend to originate from corporate research departments. Independent inventors tend to produce relatively simple mechanical inventions. The former are considerably more costly than are the latter.

In 1988, the median combined cost for the U.S. for all of the components of patent legal services was $5,091. These components are a patent novelty search and legal opinion on whether the claimed invention is patentable, $506; preparation and filing of the patent application, $2,583; preparation of the invention disclosure statement, $516; and prosecution of the application from filing through issuance or rejection, $1,486. However, the novelty search and information disclosure statement are optional and either or both may not be involved in every case.

We know the committee shares our concern about patent costs for the small entity class of applicants. With the exception of universities, the inventors in the small entity class tend to file applications on relatively straight forward mechanical inventions which are less expensive to prepare and prosecute than other more complicated inventions. The association survey shows that in 1988, the 25th percentile of combined costs for all of the components of patent legal services was

$3,821. 25% of legal costs were below that amount and 75% were above. In our opinion, $3,821 is likely to accurately reflect median legal fees for small entity applicants.

Charges for these legal services have increased over the years. For example, median charges for the novelty search and legal opinion increased on average 13% per year between 1982 and 1988. Charges to prepare the patent application increased on average 15% per year during the same period.

The committee should keep in mind that inventors may choose to prepare and prosecute patent applications for themselves. If they do, they incur no legal costs.

The association has never surveyed members on the affect of legal fees on patent application filings. Such a survey could not produce meaningful information. The fees charged vary from attorney to attorney. It may be that a prospective patent applicant refuses to hire an attorney because that attorney's fees are too high. That attorney would have no way of knowing whether that prospective applicant retained another attorney who charged lesser fees, filed an application per se, or decided not to file the application for financial reasons.

4. You indicate that the Budget Reconciliation Act, which requires the Patent Office to operate without appropriations, will make financial planning difficult since the Patent Office can only estimate what income it will receive. Your organization is studying whether the Patent Office should be established as a government corporation. Would it be any easier for the Patent Office to estimate its revenue as a government corporation?

4. (answer)

Yes. Increases in patent applications have been moderate and fairly predictable over the past 20 years. The only exception was the two years following the precipitous fee increase of 1982 when applications declined and then began to recover. With the November 5, 1990 69% fee increase, we are currently in a period of uncertainty. During the 1980's, modest consumer price index increases in fees had no apparent effect on filing levels.

If the PTO were a government corporation several basic changes could occur. Large capital expenditures could be funded with borrowed money, and the cost amortized over the life of the machinery or building. This would prevent sharp one-time increases, and allow for moderate increases spread over long periods of time.

Also, we think it is likely that PTO would abandon strict adherence to the current 18-month pendency goal if it was a government corporation. A key feature and advantage of the government corporation is to provide that users of PTO services to have an institutional role in setting PTO policy. Without the 18-month pendency goal, the PTO could adopt a more moderate wait and see approach to setting fees. Increasing fees to increase the size of the examiner corps should trail increased filings. If these investments precede filings to insure the 18-month pendency goal, they can be counterproductive and in themselves cause further filing decreases, if the one-time increases are sharply higher.

5. Recently, Senator Hatch and I reintroduced the Patent Remedy Clarification Act, S. 758. We have also introduced the Trademark Clarification Act, S. 759. Do you agree that there is a need for the protection these bills provide?

5. (answer)

The AIPLA strongly supports S. 758. We commend the committee for taking action on this issue in the last Congress, and hope that S. 758 is acted upon promptly in this Congress. S. 758 remedies a meaningful problem in enforcing patent rights uniformly.

The AIPLA has not taken a position on S. 759, but will do so in the near future.

Senator DECONCINI. Thank you, Mr. Lee.
Mr. Smegal.

STATEMENT OF THOMAS F. SMEGAL, JR.

Mr. SMEGAL. Thank you, Mr. Chairman. I am Thomas F. Smegal, Jr., of the San Francisco law firm of Townsend & Townsend. I serve as chairman of the American Bar Association's Patent, Trademark and Copyright Section, whose volunteer membership exceeds 10,000 lawyers. I might point out as an aside that I have succeeded to that position following Commissioner Manbeck, and I don't intend to be back before this committee again in his present capacity.

Thank you for the invitation to participate in today's hearing and for the opportunity to testify on the administration's funding authorization proposal for the U.S. Patent and Trademark Office. My written statement which I have submitted covers a substantial number of our concerns. However, the brief remarks I am going to deliver will focus on what we feel are two of the most important points, those being the essential need to spread out the hundreds of millions of dollars needed to complete the automated patent system over a period corresponding more closely to the useful life of that system, and, two, the point you focused on, the need to reestablish some funding of a small entity subsidy from appropriated funds.

While one of Mr. Lee's predecessors, then president of the AIPLA, testified before this committee in February of 1987 that the patent bar was most concerned with the undefined cost of automation of the patent examination process, then being funded at 70 percent with taxpayer dollars, that concern of the patent bar has not diminished in the last 4 years.

It has now been refocused on our fear that the ever-expanding cost of the automated patent system, now to be entirely user fee-funded, will kill the goose, the inventor, that has been laying golden eggs, U.S. patents, for the last two centuries.

As automation costs have escalated, patent fees have dramatically increased. As was pointed out earlier, less than 10 years ago the entire user fees for filing and issuing a U.S. patent were $165. As that portion of the Patent Office budget supported by general revenues has decreased since 1982, user fees have dramatically risen. Yet, from 1982 to 1990, this Congress never lost sight of the critical need to encourage small entities, such as independent inventors, to continue to create technology so vital to our economy.

Even though the Patent Office filing and issue fees were raised to about $1,000 in 1990, since 1983 Congress had required small entities to pay only half the actual cost of patent examination, as the chairman has already pointed out. However, all that changed last November when Congress enacted the Omnibus Budget Reconciliation Act of 1990.

Thus, just 6 months ago, the entire burden of funding the Patent Office examination system and the patent automation system were transferred from general revenues to the user, the patent applicant, first in the form of a 69-percent surcharge on patent fees in 1991. Literally overnight, without public testimony or congressional debate, Congress eliminated the participation of the public in the

U.S. patent system, a system that has been providing a tremendous return on a mere annual investment of about $100 million through tax revenues on billions of dollars of patent licensing fees, for example, as well as the jobs that were mentioned earlier.

The November 1990 economic shift was not just from the taxpayer to the patent applicant, but unevenly to large entities having assigned patent applications. They now pay substantially more than the actual cost of patent examination, twice as much as the small entities for obtaining and maintaining a U.S. patent in excess of the actual Patent Office costs.

Thus, a Congress that as recently as August 23, 1988, had recognized the importance to our economy of a strong patent system by enacting Public Law 100-418 that extended U.S. patent protection to nonpatented products made by the offshore practice of a process protected by U.S. patent laws, thereby reaffirming its long-held commitment to maintaining the best patent system in the world—yet, only 2 years later, without public testimony, Congress pulled the safety net from our patent system, leaving patent applicants to user-fund the entire Patent Office budget, including long-term automation expenses.

None of my comments are intended to be critical of the budget presented by the Patent Office. As far as I am concerned, it is essential to their operation. But if Congress is now reluctant to continue to subsidize the patent fees, such as foreign applicants among our small entities, I have suggested in my paper that at least we could lessen the impact on our own inventors among our U.S. taxpayers by creating a tax credit for all the increased Patent Office examination and maintenance fees that are anticipated. At least let us give our small inventors and our small entities some sort of opportunity to recoup some of the additional expenses that are now being offered or proposed for them.

If Congress now believes that the cost of patent automation should be borne entirely by user fees paid by patent applicants, let us spread the cost out over a longer period of time corresponding to the useful life of this automation equipment. To impose the entire economic burden in creating a patent automation system that will function for several decades upon our inventors during the next few years makes no economic sense.

What would seem to make more sense is to create, as Mr. Banner has suggested, an independent governmental agency that can amortize the ever-increasing expense of completing the patent automation system over a much longer period, such as 20 or 30 years. Imposing the entire cost on the applicants who file in the next 3 or 4 years seems to be unjust.

Mr. Chairman, I thank you for your concern with maintaining a strong U.S. patent system, and we will look forward to answering your questions. Thank you very much.

[The prepared statement of Mr. Smegal and written questions and answers follow:]

45-117 0 - 91 - 5

1990-91
CHAIR
Thomas F. Smegal, Jr.
20th Flr., Steuart Street Tower
One Market Plaza
San Francisco, CA 94105
415/543-9600
CHAIR-ELECT
B. R. Prasel
Ste. 1010
1177 W. Loop South
Houston, TX 77027
713/850-0909
VICE-CHAIR
Jack C. Goldstein
P.O. Box 4433
Houston, TX 77210
713/787-1515
SECRETARY
Brian E. Barnes
AJSG
800 N. Lindbergh Blvd.
St. Louis, MO 63167
314/694-3271
FINANCIAL OFFICER
Sidney B. Williams, Jr.
301 Henrietta St.
Kalamazoo, MI 49007
616/385-7236
SECTION DELEGATE TO THE HOUSE OF DELEGATES
Joseph A. DeGrandi
1819 H St., NW
Washington, DC 20006
202/659-2811
SECTION DELEGATE TO THE HOUSE OF DELEGATES
John K. Williams
2001 Ferry Bldg.
San Francisco, CA 94111
415/433-4150
IMMEDIATE PAST CHAIR
Joseph J. Previto
Empire State Bldg.
New York, NY 10001
212/736-2080
ASSISTANT TO THE SECRETARY
Gregory J. Maier
Crystal Square 5, 4th Flr.
1755 Jefferson Davis Highway
Arlington, VA 22202
703/521-5940
ANNUAL PUBLICATIONS EDITOR
Michael O. Sutton
P.O. Box 4433
Houston, TX 77210
713/787-1599
NEWSLETTER EDITOR
Thomas I. O'Brien
Rm. E3269
39 Old Ridgebury Rd.
Danbury, CT 06817-0001
203/794-6194
COUNCIL MEMBERS
Guy M. Blynn (1992)
Winston-Salem, NC
William M. Borchard (1991)
New York, NY
Ronald B. Coolley (1992)
Chicago, IL
Donald R. Dunner (1993)
Washington, DC
William T. Fryer, III (1991)
Bethesda, MD
John R. Kirk, Jr. (1994)
Houston, TX
Maurice H. Klitzman (1994)
Bethesda, MD
Leonard B. Mackey (1993)
New York, NY
Laurence H. Pretty (1991)
Los Angeles, CA
Kurt O. Steele (1993)
New York, NY
Jerry D. Voight (1994)
Washington, DC
Richard C. Witte (1992)
Cincinnati, OH
BOARD OF GOVERNORS LIAISON
Lloyd Lochridge
1300 Capitol Center
919 Congress Ave.
Austin, TX 78701
SECTION STAFF - WASHINGTON
J. Jan Jancin, Jr.
Legislative Consultant
1800 M St., NW, #790
Washington, DC 20036
202/331-2617
Fax: 202/331-2220
SECTION STAFF - CHICAGO
Michele A. Bridges
Staff Administrator
312/988-5595
Hazel Matthews-Walker
Administrative Assistant
312/988-5619
750 N. Lake Shore Dr.
Chicago, IL 60611
ABA/net: ABA387

AMERICAN BAR ASSOCIATION

Section of Patent, Trademark and Copyright Law
750 N. Lake Shore Drive
Chicago, Illinois 60611
312/988-5595
ABA/net: ABA387
FAX: 312/988-5500

STATEMENT BY

THOMAS F. SMEGAL, JR., CHAIR

OF THE

AMERICAN BAR ASSOCIATION

SECTION OF PATENT, TRADEMARK & COPYRIGHT LAW

SUBMITTED TO

COMMITTEE ON THE JUDICIARY

SUBCOMMITTEE ON PATENTS, COPYRIGHTS & TRADEMARKS

RE

LEGISLATION TO AUTHORIZE APPROPRIATIONS

FOR THE

UNITED STATES PATENT & TRADEMARK OFFICE

APRIL 11, 1991

STATEMENT ON LEGISLATION TO AUTHORIZE APPROPRIATIONS

FOR UNITED STATES PATENT & TRADEMARK OFFICE

BY

THOMAS F. SMEGAL, JR.

I am Thomas F. Smegal, Jr., of the San Francisco law firm of Townsend & Townsend. I serve as Chairman of the American Bar Association's Section of Patent, Trademark and Copyright Law. Thank you for the invitation to participate in today's hearing and for the opportunity to testify on funding authorization for the U.S. Patent and Trademark Office.

I am pleased to have been invited to testify. While my comments are based on long standing positions of the ABA House of Delegates, my particular views of the PTO's proposed authorizing legislation will be presented only on behalf of the Section since they have not been submitted to, nor approved by, either the ABA House of Delegates or Board of Governors.

It seems appropriate at the outset to point out that my statement is not intended to be critical of the Administration's budget package nor of PTO Commissioner Harry Manbeck who admittedly has a difficult task. I understand the constraints under, and the parameters within, which he must operate.

On the other hand, it will appear at times that I may be criticizing the budget package when questioning whether the PTO's stated mission to (a) promote industrial and technological progress in the United States, and (b) strengthen the national economy, can be accomplished through the Administration's authorizing legislation that has been introduced in the House as HR 1613 by Representative Hughes and submitted to the Senate as the subject of this hearing.

The following pertinent long-term ABA policies that effectively provide the groundwork for our testimony regarding PTO fees include:

1) ABA approval in principle of reasonable fee increases.

2) ABA support of fee charges that are reasonably apportioned in accordance with the cost of providing a particular service.

3) ABA opposition to fees that effect an overall recovery of a particular predetermined percentage of PTO operations cost.

4) ABA further opposition to requiring that the PTO be completely self-sustaining from user fees.

Studies by Committees from within our PTC Section recommend that fees should not be the vehicle to recover a major portion of PTO costs. Most significantly fees should not be at a level to discourage inventors -- especially individuals and small businesses. We also believe that any provision for the recovery of a percentage of costs

tends to promote inefficiency in operations. Fees should improve the quality of PTO operations and per se should not govern such operations.

We ask the following rhetorical but realistic question -- why must large few-time capital expenditures be made to appear as huge blips in the PTO's expenditure graph? Why cannot these "mountains" of expenditure be leveled off over a longer amortization-like period of time? Wouldn't such a leveling off practice go a long way towards maintaining a consistency year after year in prescribed PTO fee amounts?

These questions all apply to the situation in which we now find ourselves through the extremely large automation costs to be entirely funded by user fees in the relatively near-term period. These costs represent the expenditure blips to which I referred earlier. These particular costs are especially egregious in light of the recent official decision to go from the 1986 Congressional mandate requiring recovery of 30% of automation costs from user fees to an automation project supported entirely by user fees.

Mr. Chairman, we believe that there should be an amortization-like mechanism within the Government to provide a financial correction of the type being discussed. Such a mechanism could significantly level out PTO fees over a meaningful period of years. We are prepared to work with you and others to seek a creative solution.

The PTO automation project not only is intended to provide long-term benefits for the PTO, but also other Government agencies who will benefit from this automation research and development project. This makes it reasonable to ask why the PTO, Department of Commerce, or other designated Government unit cannot spread the costs, by floating a bond issue over say a 20-year period, not unlike comparable action that can be taken by a State or municipal agency.

I might mention at this juncture that during the inaugural meeting on March 26, 1991, of the Secretary of Commerce's PTO Advisory Commission on Patent Law Reform, a subcommittee #4 was organized from its members to study, among other things, PTO funding including fee structure. A copy of my statement as well as an offer to cooperate with that subcommittee will be provided to the Chair of that subcommittee.

Should the PTO proposal to eliminate the small entity subsidy be enacted, we urge you to consider a tax credit for American tax paying small entities. For example, and to put this concept across in principle, assume that an American independent inventor will be required to pay a FY'92 PTO fee cost of $500.00 -- precisely the same fee cost to be paid by a large entity. However, and for the purpose of this example, even though the FY'91 50% subsidy to the independent inventor were to be eliminated, we propose that this American inventor be provided with a $250.00 U.S. income tax credit in the year that the fee cost was incurred.

At present, all small entities pay reduced fees, Yet were a foreign

independent inventor to be required to pay an additional PTO fee of $250.00 fee, the foreign inventor who does not pay taxes in this country would not receive such tax credit.

Would this represent a significant amount of money? A look at United States filing statistics that were provided by the PTO for Fiscal Year '89, reveals the following:

A) 45% of the total cases filed were foreign origin.

1) 36% of the total were filed by large entities.
2) 9% of the total were filed by small entities.

a) 6% of the total were filed by individuals.
b) 3% of the total were filed by small businesses.
c) Less than 1/2% were filed by non-profits.

B) 55% of the total number of cases filed were US origin.

1) 30% of the total were filed by large entities.
2) 25% of the total were filed by small entities.

a) 18% of the total were filed by individuals.
b) 6% of the total were filed by small businesses.
c) 1% of the total were filed by non-profits.

From the foregoing FY'89 statistics, it will be seen that 9% of all of the patent applicants in FY'89 would not have received the $250.00 tax credit in my earlier example on the strength of not being American taxpayers. According to statistics provided by the PTO, actual subsidies to foreign small entities, under present law, entail a cost of $12,555,000.00. On the other hand, some 25% of all of patent applicants that year would have received such tax credit because they were American small entity inventor taxpayers.

The statistics also show that there is only a 5% differential in the filing of U.S. patent applications between large and small U.S. inventor entities. This appears to go a long way in support of those who advocate that American small entity inventors are very creative and innovatively productive.

Mr. Chairman, we must not create an environment where the U.S. could lose this cradle of inventiveness from the American scene -- we must not impose PTO patent fees that will chill the initiative of individuals and small entities to invent.

A return to the FY'89 statistics suggests more -- for example, that more foreign origin large entity cases than domestic origin large entity cases were filed in the U.S. PTO. But many fewer foreign origin small entity cases were filed in the U.S. during FY'89 than domestic origin small entity cases. The absence of small entity subsidy encouragement abroad may simply mean that small entities don't even get started in their respective countries -- and, accordingly, don't

have a foreign patent application that can be the basis for a corresponding U.S. application.

In closing on the point about the importance of keeping small entities including U.S. independent inventors, in the innovative loop, the following publicly shared views are provided for added information:

1) Several PTO Advisory Commission members expressed their respective concerns at the March 26th meeting about the possible negative aspects on independent inventors due to the recent PTO subsidy fee revision recommendations.

2) The Commission, in its collective wisdom as indicated earlier, decided to study PTO funding and fee structure.

3) A Judge of the U.S. Court of Appeals for the Federal Circuit, only recently, is reported to have voiced a concern about the possibility of high user-fees realistically foreclosing access to the patent system by small entity applicants.

4) Former Representative Kastenmeier pointed out last year in his remarks on complying with the budget reconciliation process, that he approached the mandate to raise user fees to make the PTO self-sufficient, "with some trepidation because our decision could adversely affect the public". Mr. Kastenmeier noted a reliable intellectual property system and an effective PTO to administer that system, "provide cornerstones for stimulation of the creative genius

of this country, contributing to a better life style for all Americans, promoting competitiveness and improving the balance of trade".

These represent warnings to which we must be sensitive. It appears to us that we will need Congressional help to provide a fix which will not require large entities to carry an unfair and discriminatory high fee load, but will ask the American public to encourage continuation of small entity creativity and inventiveness through public support by way of direct public subsidies as before, or tax credits, or possibly some other imaginative and fair way. Again, we cannot risk losing this very important small entity source of American innovativeness.

The following comments and inquiries on the Administration's proposed authorizing legislation are grouped for convenient reference:

1) Overall the proposed PTO fee income increase includes large amounts for automation projects. Yet those of us in the private sector, and this may well include the Congress, do not really know where these monies will be spent. In view of previous criticisms about the automation projects and management thereof, it may well be time to conduct a further independent review as to the current status of the automation effort.

2) Subsection 4a of the proposed legislation would permit the Commissioner to establish so-called profit centers within the PTO. The example cited in the legislation to explain this concept concerns one

service cost of $0.75 per unit, another at $1.25 per unit, and the number of requests for both services roughly equal. The Commissioner could charge $1.00 for both services or could charge $2.00 for one service and nothing for the other. ABA policy opposes such concept in principle because fees charged should be reasonably apportioned in accordance with the cost of providing a particular service.

3) We support the PTO's initiative in Subsection 4b to address the adjustment of fees with Congress and the public every second year.

4) On the other hand, we oppose the shortening of the current 60 day notice period to 30 days after Federal Register publication (see Subsection 4c in the proposed legislation). The reason given for the shorter response period is not convincing -- i.e., that there is unlikely to be sufficient time to permit a sixty-day period. Since most Patent and Trademark practitioners do not read the Federal Register on a regular basis, but do read the PTO Official Gazette in which pertinent Federal Register notices are published 30 days after actual publication in the Federal Register, 60 days after publication in the Federal Register is actually only about 30 days notice for many PTO practitioners. The present practice should continue.

5) Subsection 4d of the proposed authorizing legislation raises the small entity subsidy issue that is addressed throughout this statement in terms of existing concern with the possibility of forcing small entity and independent inventors out of the patent system. We simply must find a solution to such possibility before it is too late.

6) We concur with the provision in Subsection 4e about the Commissioner not imposing fees for public use of paper or microform collections so as to permit search for, and retrieval of, information. We also favor the establishment of free access by the public to automated search systems in the PTO and at remote locations supported by the PTO.

7) We oppose Subsection 4f in the proposed legislation because trademark fees should only be paid for the processing of trademark applications and services. If such fees are reprogrammed for non-trademark activities, they become a tax on trademark users which, if not illegal, is unfair and an improper use of trademark fees.

8) Section 5 of the proposed legislation is unclear as to the distinction between "machine readable data" and "data for automation programs". This pending statutory language should be clarified.

We trust that you will find the foregoing comments useful on aspects of the proposed legislation.

Moving ahead to another area, you may be interested in learning about fee related measures being considered -- and still being studied -- by the Committee structure within our ABA PTC Section. They include the following:

1) The possibility of matching small entities with a real need for

subsidy benefits. This study is being carried out in the interest of leaving no stone unturned, even though we understand that such study has been made previously by the PTO without success.

2) The definition of a small business entity? Should it be an organization of less than the currently prescribed 500 employees? Would it make any realistic difference, for example, to set the ceiling at 200 or fewer employees?

3) What about keeping only those nonprofit businesses and institutes of higher education within the small entity definition so long as such businesses and institutes do not realize a net of more than $200,000.00, for example, in a preceding calendar year from the sale and licensing of technology covered by issued United States patents?

4) What about providing subsidies to small entities for inventions made in the United States? There is a danger that this approach might be counterproductive from the standpoint of other nations taking a reciprocal approach relative to inventions not made in those nations. However, this matter is believed to merit additional review.

5) A related issue asks about providing subsidies to only those foreign small entities from countries which offer corresponding subsidies to American small entities who file patent applications in such countries. An impetus for this particular study exists in the U.S. Semiconductor Chip Protection Act where the U.S. reciprocity

requirement has not been an impediment to foreign mask work bilateral arrangements.

6) What about a Public Advisory Board devoted entirely to fee related issues? We may be witnessing a beginning here through the PTO Advisory Commission's subcommittee study on funding and fee structure. Evaluation of this concept is believed to be appropriate.

7) Maintaining the existing statutory prohibition in 35 USC 42(c) against using trademark fees to support non-trademark operations that otherwise take on the appearance of a tax on trademark users which, if not illegal, is an unfair use of trademark fees.

8) The danger to American innovation through the proposed legislation to eliminate the availability of the 50% subsidy to small entities with respect to all, but initial filing, fees. Consideration will also be given to adding a provision in the proposed legislation to prohibit the use of fee income to support any backlog reduction or catch-up work.

Other contemplated studies are too detailed at this time for identification even though believed to be important. Again, we intend to cooperate with other Government and private sector organizations into similar studies.

You should also know, Mr. Chairman, that a small, select Committee

within our Section is addressing the highly intriguing and potentially significant question about the PTO as an independent Government corporation. The ABA recognizes that strong patent and trademark systems are vital to the economy of the United States -- and, accordingly, the ABA favors in principle legislation to remove the United States Patent & Trademark Office from the Department of Commerce and make it a separate and independent agency. On-going consideration of this concept is justified by, and must be carried out to explore, the following areas:

1) Increased user involvement in the management of the PTO including program priorities and management as well as fiscal priorities and planning to assure responsiveness to user needs and priorities.

2) The large and costly automation effort which raises priority management and policy issues with a major impact on fees and services.

3) A need for further improvements in the quality and timeliness of administration and services.

4) Establishment of a business-like operation to assure an efficiently and effectively run operation that is responsive to user needs.

5) A fiscally independent operation.

6) Retention of a qualified staff as changing needs dictate.

Mr. Chairman, it is likely that you will hear more about this matter in the future from a constituency of entities that is already on record in support of an independent PTO Government corporation.

This completes my testimony. Thanks again for the opportunity to participate in the hearing. I am prepared to address questions raised by you, Mr. Chairman, and other members of the Subcommittee.

Thomas F. Smegal, Jr.
April 11, 1991

AMERICAN BAR ASSOCIATION

Section of Patent, Trademark and Copyright Law
750 N. Lake Shore Drive
Chicago, Illinois 60611
312/988-5595
ABA/net: ABA387
FAX: 312/988-5500

May 7, 1991

Senator Dennis DeConcini
Chairman
Subcommittee on Patents,
Copyrights and Trademarks
United States Senate
Subcommittee on Patents, Copyrights
and Trademarks
Senate Judiciary Committee
Dirksen Office Bldg.
Washington, DC 20510-6275

Dear Senator DeConcini:

This is in response to your letter of April 23, 1991, with which you enclosed supplemental questions, the answers to which you indicated would be included in the hearing record by submitting them to Mara Mallin by May 10, 1991.

My responses on behalf of the American Bar Association are set forth on the attached enclosure, along with a repeat of the questions themselves.

I thank you for your kindness in allowing me to testify on April 11, 1991, and appreciate your interest in obtaining further information with respect to the views of the American Bar Association on pending legislation to authorize appropriations for the Patent and Trademark Office and the Department of Commerce.

Very truly yours,

Thomas F. Smegal, Jr.

TFS/abs
enc.

1990-91
CHAIR
Thomas F. Smegal, Jr.
20th Flr., Stewart Street Tower
One Market Plaza
San Francisco, CA 94105
415/543-9600
CHAIR ELECT
B. R. Pravel
Ste. 1010
1177 W. Loop South
Houston, TX 77027
713/850-0909
VICE-CHAIR
Jack C. Goldstein
P.O. Box 4433
Houston, TX 77210
713/787-1515
SECRETARY
Brian E. Banner
AJSC
800 N. Lindbergh Blvd.
St. Louis, MO 63167
314/694-3271
FINANCIAL OFFICER
Sidney B. Williams, Jr.
301 Hennessy St.
Kalamazoo, MI 49007
616/385-7236
SECTION DELEGATE TO THE HOUSE OF DELEGATES
Joseph A. DeGrandi
1819 H St., NW
Washington, DC 20006
202/659-2811
SECTION DELEGATE TO THE HOUSE OF DELEGATES
John E. Ulkema
2001 Ferry Bldg.
San Francisco, CA 94111
415/433-4150
IMMEDIATE PAST CHAIR
Joseph J. Previto
Empire State Bldg.
New York, NY 10001
212/736-2080
ASSISTANT TO THE SECRETARY
Gregory J. Maier
Crystal Square 5, 4th Flr.
1755 Jefferson Davis Highway
Arlington, VA 22202
703/521-5940
ANNUAL PUBLICATIONS EDITOR
Michael O. Sutton
P.O. Box 4433
Houston, TX 77210
713/787-1599
NEWSLETTER EDITOR
Thomas F. O'Brien
Rm. 13269
39 Old Ridgebury Rd.
Danbury, CT 06817-0001
203/794-6194
COUNCIL MEMBERS
Guy M. Blynn (1992)
Winston-Salem, NC
William M. Borchard (1991)
New York, NY
Ronald B. Coolley (1992)
Chicago, IL
Donald R. Dunner (1992)
Washington, DC
William T. Fryer, III (1991)
Bethesda, MD
John R. Kirk, Jr. (1994)
Houston, TX
Maurice H. Klitzman (1994)
Bethesda, MD
Leonard B. Mackey (1993)
New York, NY
Laurence H. Pretty (1991)
Los Angeles, CA
Kurt D. Steele (1993)
New York, NY
Jerry D. Voight (1994)
Washington, DC
Richard C. Witte (1992)
Cincinnati, OH
BOARD OF GOVERNORS LIAISON
Lloyd Lochridge
1300 Capitol Center
919 Congress Ave.
Austin, TX 78701
SECTION STAFF - WASHINGTON
J. Ian Lancin, Jr.
Legislative Consultant
1800 M St., NW, #790
Washington, DC 20036
202/331-2617
Fax: 202/331-2220
SECTION STAFF - CHICAGO
Michele A. Bridges
Staff Administrator
312/988-5595
Hazel Matthews-Walker
Administrative Assistant
312/988-5639
750 N. Lake Shore Dr.
Chicago, IL 60611
ABA/net: ABA387

Question 1) I note that one of the topics being studied by your Section is whether the United States should provide subsidies to only those foreign small entities coming from countries which offer corresponding subsidies to American small entities. Would this violate any of the international patent conventions or treaties that United States has signed? How much revenue would this proposal generate in FY 1992?

Answer 1) The Section formed a special ad hoc task force on PTO fees and funding structure approximately 2-3 months ago. We requested the identification of any and all ideas pertaining to this matter simply to leave no stone unturned in finding suitable answers. Furthermore, on the expectation that one thought can help generate another, we did not want to discourage any free thinking. Our review of the reciprocity concept underlying your question suggests dropping it. In fact, such a proposal would raise serious questions regarding the national treatment required under the Paris Convention. While there has been some discussion of the possible amendment of 35 United States Code Section 104, that provision of the Patent Code is based on geography and not on nationality, so that the U.S. would in that instance have a colorable argument that national treatment would not be violated. To the contrary, however, a proposal to collect small entity fees from only those countries which made similar fees available to U.S. nationals, by its very nature, depends on nationality and would certainly draw immediate criticism from other countries which are signatories to the Paris Convention. Unfortunately, this idea appears to have no promise.

Question 2) Is the American Bar Association willing to delay patent automation or have a longer patent pendency period in exchange for lower patent fees?

Answer 2) As I testified before the U.S. Senate Judiciary Subcommittee on April 11, 1991, the American Bar Association favors automation of the patent system. However, it is our view that the longer such automation is delayed, the less expensive it will become. Before expending substantial additional sums, it is our view that the European system of automation should be carefully studied to determine what cost savings can be gained from their experiences. Furthermore, the proposed automation system for the U.S. Patent Office should be the subject of further study to determine where substantial costs can be reduced. For example, the custom-made work stations that we understand to be presently contemplated are quite expensive. With the passage of even a brief period of time, the cost of that equipment will be substantially reduced. It is anticipated that such work stations will become standard in the industry within the next several years.

To the extent that a longer patent pendency period would be necessary were user fees not increased (and therefore additional personnel not hired), the American Bar Association has always focused on the quality of the prosecution process in the Patent

Office. Whether the process requires a few additional months is of much less concern to the American Bar Association than is the quality of patents being issued.

Question 3) You have expressed considerable concern about the magnitude of the fees the Patent Office now charges for a patent. But what is the "total" cost of obtaining a patent? That is, what percentage of the total cost of obtaining a patent would be Patent Office fees and what percentage would be patent attorney fees? Have the fees that patent attorneys charge inventors risen over the last few years? Has your association ever surveyed your members on patent legal fees and its affect on patent filings?

Answer 3) While it is impossible to accurately estimate the percentage represented by Patent Office fees in the total cost of obtaining a patent, the experience in my San Francisco law firm is that over the last ten years (from 1981 to 1991) our attorneys' fees for preparing and prosecuting a relatively simple mechanical patent application, including two sheets of drawings, have probably risen from about $2,000 to about $3,000. Again, it is difficult to estimate, and varies geographically, but the cost of prosecuting the aforementioned simple mechanical application may have risen from $1,000 to $2,000. In that same time period, Patent Office fees have risen from under $200 to over $6,000. Thus, in terms of the proposed FY'92 filing, issuance, and maintenance fees, they have reached the point where they will substantially exceed the attorneys' fees involved in the preparation and prosecution of the kind of U.S. patent application that is often what individual inventors and other small entities seek protection under the patent law system.

The American Bar Association has not surveyed its members on patent legal fees, but the American Intellectual Property Law Association has. I understand that information has been, or will be, provided to your committee by that organization.

Question 4) Recently, Senator Hatch and I reintroduced the Patent Remedy Clarification Act, S. 758. We have also introduced the Trademark Clarification Act, S. 759. Do you agree that there is a need for the protection these bills provide?

Answer 4) Yes. The American Bar Association is fully in support of both S. 758 and S. 759 as introduced by you and Senator Hatch.

Senator DECONCINI. Mr. Smegal, I wish I could give you any encouragement that there is going to be any change in that. That was a deal that was cut, as you know, between the administration and the Congress up here, and I don't see any hope for tax credits. I think that is a good idea. I know you are making constructive suggestions here, but, you know, we have got to deal with what we have got, and what we have got is a bad situation that indeed Congress has decided no longer to be a player financially in encouraging filing of patents and innovative ideas from its own citizens.

I think it is a tragedy and a shame, but I don't see that we are going to change it. I think what we have got to do is deal with the here and now, and let me ask you a question regarding this for all of you. You heard Mr. Manbeck testify about a possible increase of 10 percent across the board.

Nobody wants to raise taxes or see fees go up, but given the fact that we are going to not change what Congress and the administration agreed to last year—if I am wrong, fine, and if I get a chance to vote on it, I will vote to change it. But given that as a premise, and given the premise that at least for my question to you we are going to permit them to have the money that they suggest they want here, what is the best way to raise it? Is it the way they have done it, or 10 percent across the board, or is there an economic threshold that you can come up with? Do you want to start, Mr. Smegal?

Mr. SMEGAL. If I may respond, Senator Grassley suggested they slow down the examination process. One of the things that occurs to me in response to your question would be to slow down the automation process, to spread out this $100 million a year that we are now spending on automation over a greater period of time and take a little more time.

Senator DECONCINI. Do you think that is a good way to run a business and not go ahead and modernize and be efficient?

Mr. SMEGAL. Well, in the sense of the current applicants getting any benefit from this automation system, I don't think the dollars justify it. Those who are filing applications now are not benefitting from an automation system that will not be in place and operating for several years.

Senator DECONCINI. We don't know how much that would save. I don't know if it would pick up the whole amount of increase or not. What do you think about a 10 percent across the board, versus what they are suggesting, hitting the small entity?

Mr. SMEGAL. The trouble I have with that is it is a tax. If the large entities are already paying—in fact, they are paying more than the cost of the service they are receiving. You are taxing them, in addition, for a service they are not receiving, and I think that is a system that President Bush has indicated he doesn't approve of.

Senator DECONCINI. Well, he did approve of it. He approved of moving this whole thing upon the users. That wasn't the Congress' idea; that came from Mr. Darman, maybe not Mr. Bush. But that was Mr. Darman's idea to make this a user fee agency, you know, so that is exactly where we are. And the Congress foolishly said, oh, yes, we will go along with it.

Mr. SMEGAL. I wasn't at Andrews.

Senator DECONCINI. Yes. Well, I wasn't at Andrews, but I talked to enough of them, particularly on this issue, because I tried to get my oar in to see it not happen and, you know, that is what we are stuck with. We have changed the philosophy in this country, like you say, so my question is not to be argumentative with you, but is it better to do 10 percent across the board than the unfairness of already charging the big entities more than the little entities? Is there more advantage to this country in developing patents by continuing the small entities at a lower rate and getting the money from the big entities? That is the No. 1 question.

Mr. SMEGAL. Well, I find that troublesome, getting it from either party. Again, I come back to—10 percent, I guess, represents $46 million.

Senator DECONCINI. Yes.

Mr. SMEGAL. The proposal of a tax credit rather than—an increase in a tax credit would save about $12.5 million just on foreign small entities who wouldn't have an opportunity to claim the tax credit. According to Commissioner Manbeck's numbers and the statistics I have worked out on the material he has filed, that did represent a $12.5 million government subsidy when it was coming out of general revenues. Now, what is happening is the large entities are paying that $12.5 million for foreign small entity filings.

Senator DECONCINI. That is right.

Mr. SMEGAL. You transfer it to a tax credit situation, and they aren't filing income tax returns in this country.

Senator DECONCINI. Yes, sir, do you have any comments?

Mr. LEE. Yes, thank you, Mr. Chairman. We have two suggestions that are alternatives. First, we think that if the Patent Office were to change the 18-month program whereby they try to issue patents very, very quickly, within 18 months—that is an unrealistic number, in our view. It requires more expensive operation. There is nothing magical about an 18-month number. We think it could be 24 months, and the average person would be just as happy as before.

The second thing is the automation program is at a critical stage where they have not yet purchased a lot of heavy equipment, but they are going to in the next year or so. We think at this point in time, they ought to stop and take a good look at what is happening before they spend huge sums of money. We think they ought to take a look at the possibility of other ideas.

The European Patent Office, for example, is very far along without such heavy expenses with heavy mainframes, and we think that if the Patent Office were to take 6 months off in the automation program at this time, a breathing space, so speak, refresh themselves and look around before they spend these hundreds of millions of dollars on the automation system, they may save money. We think that is a very likely possibility and we strongly recommend it.

Senator DECONCINI. Mr. Lee, that is very interesting because I am no expert on automation, but going over there and seeing all of the hand work that is done, and you think of any business that would try to operate that way—I have to compliment Mr. Manbeck on moving as swiftly as he can, assuming he is not getting taken by the systems that he is buying, and I have no way of knowing. I

can't believe that we operate a Patent Office—and you know better than I do. Is work in foreign patent offices all done by hand; none of them are automated?

Mr. LEE. Well, no. The Japanese and the Europeans are in mid-stream in automation.

Senator DECONCINI. Are they?

Mr. LEE. Yes, and it certainly is something that has to be done. Otherwise, as Mr. Manbeck said, we will be drowned in paper. But I think we have reached a point where, if we took a look for the next 6 months, that wouldn't hurt anybody. There are hundreds of millions of dollars to be saved.

Senator DECONCINI. But you are putting it off.

Mr. LEE. We are putting it off 6 months.

Senator DECONCINI. Six months, yes. Then the next year you are right back here with the same thing, assuming automation is justified. Now, if you assume that it isn't, then you may have long-term savings.

Mr. LEE. As I understand Mr. Manbeck's budget, a big piece of the budget is the automation.

Senator DECONCINI. Yes, it is.

Mr. LEE. It is something over 20 percent, or so; I think it is almost 25 percent. That is enormous, and if they could just take—let us not say 6 months; let's take 3 months, then, for a breathing space and look at that tremendous budget, 25 percent, and try to save some money. Maybe we won't have to increase the fees again.

Senator DECONCINI. Would you run a business like that, if you had a paper machine like he has, and not go to automation as fast as you could?

Mr. LEE. I agree with the concept. It has to be done.

Mr. BANNER. Mr. Chairman, I think——

Senator DECONCINI. You are a former Patent Commissioner. What would you do? Would you continue to do it by hand over there and not automate.

Mr. BANNER. Well, I think you have to ask yourself a question. What is the benefit of automation? Is this for the Patent Office?

Senator DECONCINI. Well, there are a lot of benefits.

Mr. BANNER. Is this for the Patent Office?

Senator DECONCINI. Well, if you ask me the question, I see it for several—No. 1, the Patent Office could run it more effectively long term. They would know where their patents are and they wouldn't lose them if it was truly automated.

Mr. BANNER. And what else?

Senator DECONCINI. Hopefully, the public would be better served.

Mr. BANNER. Now, there is the issue.

Senator DECONCINI. Yes.

Mr. BANNER. Before I became the Commissioner, and that was right after the ark landed, I used to talk about this because the issue is telling the people of the United States what the technology is that we have in that wonderful library over there so that we don't reinvent the wheel, so that we raise the educational level of people around the country.

When I was in private industry, I used to send engineers to the Patent and Trademark Office, and they would go through the files. We want that kind of data available to us in Des Moines, IA, in

San Francisco, in Phoenix, AZ, so that the people who are there can go and find out what the technology is. They don't have to go to Washington, DC, to find out, do they?

The automation program should be looked at as something to increase the technical level of everybody in the United States of America. If we are just doing this to make the Patent Office run, we have been wasting an awful lot of time and an awful lot of money.

We are talking now in this very document that is in front of you, sir, about $150 million a year. That is a lot of money, and we are charging it to you today if you are a patent applicant. You are paying for that system, and yet you aren't getting any benefit at all out of that system. And I have to ask, what are we doing this for?

Senator DECONCINI. You are making the argument that you shouldn't do it?

Mr. BANNER. My argument is that this is so obviously a public benefit, this is so obviously a library of tremendous technical value, if the Congress can't see the advantage of paying for that, let us forget it.

Senator DECONCINI. Well, I think maybe what we should do is forget it because Congress isn't going to change it. Congress and the administration are not going to change what they did last year, no matter how much you and I all agree we should. That is one of the reasons I voted against the thing, and some of us did who know about the foolishness of user's fees on such things as patents.

So, you know, we can debate that and all sit around here and say, oh, God, we should change it, you guys are so bad, and we are so bad to do it. But it is not going to happen, so how do we make it work?

Mr. BANNER. Do you think that the Senators in the U.S. Senate have ever really understood what automation is?

Senator DECONCINI. What automation is?

Mr. BANNER. Yes, what it is for.

Senator DECONCINI. I don't know. I mean, I can't answer that question. I know from just a layman's terms, Mr. Banner—I have never been a Commissioner, but just going over there and seeing all this work——

Mr. BANNER. It is a library.

Senator DECONCINI [continuing]. If I walked there, I would certainly think that automation was necessary.

Mr. BANNER. It is necessary for the Patent and Trademark Office. My point is it is necessary for the country. It is necessary for our people, for our colleges, for our universities.

Senator DECONCINI. OK, but the country is not going to pay for it, OK? So, how do we pay for it? We are going to pay for it on user's fees. We are going to tax the people that are going to benefit, and even those who won't benefit maybe in the future. We are going to pay for it. I am trying to find what the best way to do it is.

If I could pass a bill here authorizing the Congress to pay this out of general revenues, I would do it. I don't think I could even get it out of the democratically controlled Judiciary Committee, much less through both Houses and the Budget committee here. I think we are kidding ourselves. I am looking to you guys as a re-

source for how do you innovatively come up with this other than just being against it.

I don't like taxes; nobody does. But, you know, we have got them, and we have got to deal with the deficit and we may have to raise taxes. Nobody is going to want to do that, but that is what is going to happen. It is a real dilemma. I mean, I find it very frustrating for you experts here, quite frankly, to just say, well, Senator, go back and get the Congress to pay this because there is a public interest. I agree with you. I am just saying that I don't think it is going to happen.

So, then I am asking you guys who are in the trade business what is the least unacceptable medicine or least unacceptable fees, and you really don't have any ideas except don't modernize over there and don't automate, just kind of put it off. Maybe that is all there is to do. I can't come up with anything better myself, but I am looking to you all for some innovative ideas.

Mr. BANNER. May I make one point here? I think Mr. Lee mentioned to you something that is very important, I think, and that is that there are less expensive ways to automate than the way we are doing it, and that is very important.

Senator DECONCINI. Well, then that is a good suggestion. Maybe we need to look at alternatives to the automation program that he has. Quite frankly, I have not asked that question.

Yes, sir?

Mr. SMEGAL. One of the things I think we have to do and what some of my comments focused on, and Mr. Banner has been focusing on it, is recognize who is benefiting from this patent system. I pointed out that there are billions of dollars in taxes generated every year by patent licenses. Why not give the Patent Office a credit for all the money that is being generated through the tax collection system from corporations and individuals who have licensed their patent technology, received millions of dollars, and pay, what, 34 percent tax on it? I mean, that is billions and billions of dollars. Why not a user fee credit to the Patent Office from the IRS?

Senator DECONCINI. Well, you know, the reason is because it all comes out of the same deficit, and if you take it away from the Treasury over there, it just adds it on some place else. That is why they wanted to raise the fees to the users so you could not take it out of the general Treasury. So if you give a tax credit on your income tax credit, you take it from the Treasury. I mean, that is the way it works.

Mr. SMEGAL. Senator, I am reminded when I served at the nomination of President Reagan and the confirmation of this Senate on the Legal Services Corporation board for about 5 years. I used to make the argument when I came up here and asked for more money for the Legal Services Corporation, and didn't get it, that the Congress was trying to balance the budget on the backs of the poor.

Senator DECONCINI. Wait a minute, Mr. Smegal. It was the administration that wanted legal services completely cut.

Mr. SMEGAL. My point is it sounds like what we are trying to do now is balance the Federal budget on the backs of the inventors.

Senator DECONCINI. Yes, but wait a minute. You started me off. [Laughter.]

Believe me, it was Senator Domenici, who was chairman of the Budget Committee, who is a Republican, along with the Democrats, that said no to the Reagan administration on zero dollars, as you may recall. You and the administration were working hard to not have that at all.

Mr. SMEGAL. I apologize, Senator. I didn't mean to——

Senator DECONCINI. That argument won't sell.

Mr. SMEGAL. My point was only that at that point there was that argument, and now it sounds to me like we are balancing this budget on inventors, and I don't think we should do that.

Senator DECONCINI. Yes, I agree with you. We shouldn't do it, and I wish there were support in the administration and in Congress to change that, but I don't think it is there. Certainly, if an administration doesn't want to lead this country, it takes an awful strong Congress. It took a strong Congress to say no to President Reagan on legal services, and even a strong Republican Senate to say, no, we are going to continue legal services at least at the current levels, no increases.

Mr. LEE. Mr. Chairman, could I make another comment?

Senator DECONCINI. Yes, you sure can, Mr. Lee.

Mr. LEE. When I made the suggestion about taking a 3- to 6-month breathing spell to try to save money on it before spending the money on the big hardware for the automation system, I didn't mean that these people should just sit around and maybe somebody would have an idea out of the blue; quite the contrary.

In our organization, we have a committee of experts who have some very specific suggestions and recommendations worked out to present to the Patent Office whereby that money would be saved in very large quantities, and it is based on the European system. It is not something out of the blue.

Senator DECONCINI. Well, it is helpful to know that there are some people who have been thinking about it. I feel very inadequate, to tell the truth, on what to tell the Commissioner over there. I hate to see these fees go up, and I don't know if this subcommittee is going to agree with them going up anything like that.

But I will tell you, I hate to hamstring them and not be able to continue what I think is the necessity of that Office. If I were sitting in your shoes representing clients who have to pay for it, I understand where you are coming from; I understand completely. I was just hopeful that, boy, you would have a better idea than what you've said, and I don't have any.

Mr. BANNER. Well, sir, if I may, this government corporation idea takes care of a lot of those issues.

Senator DECONCINI. Yes, and that is worth looking at, but what makes you think a government corporation would run any more effectively than a commissioner of patents?

Mr. BANNER. We can spread out the time in which we have to pay for automation. We probably could reduce rent costs. We can do a lot of things of that nature.

Senator DECONCINI. You mean setting up an independent agency, so to speak?

Mr. BANNER. Yes.

Senator DECONCINI. Yes.

Mr. LEE. We are studying that, and we will come back with a report.

Senator DECONCINI. OK. Well, thank you, gentlemen. Thank you very much.

Mr. SMEGAL. Senator, thank you. While I appreciate your evaluation of the Senate, if you don't mind, Mr. Banner and Mr. Lee and I are going to continue to try to persuade this Congress that maybe there should be a broader base of user fees for this system.

Senator DECONCINI. That is very good. Put me down as one of your allies.

Mr. BANNER. There is a prayer session at 4 o'clock. [Laughter.]

Senator DECONCINI. Thank you.

Mr. LEE. Thank you, Mr. Chairman.

Senator DECONCINI. Let me ask the next panel to come up: Mr. Godown, Industrial Biotechnology Association; Mr. Goldberg, associate dean, School of Medicine, University of Missouri; and Mr. Partoyan, president of the U.S. Trademark Association. Gentlemen, sit down and I will be right with you in just a moment.

[Pause.]

Senator DECONCINI. Mr. Godown, please proceed, and we will put your full statements in the record.

PANEL CONSISTING OF RICHARD D. GODOWN, PRESIDENT, INDUSTRIAL BIOTECHNOLOGY ASSOCIATION, WASHINGTON, DC; HERBERT S. GOLDBERG, ASSOCIATE DEAN, SCHOOL OF MEDICINE, UNIVERSITY OF MISSOURI, COLUMBIA, MO; AND GARO PARTOYAN, PRESIDENT, U.S. TRADEMARK ASSOCIATION, NEW YORK, NY

STATEMENT OF RICHARD D. GODOWN

Mr. GODOWN. Thank you very much, Senator. My name is Dick Godown and I am here on behalf of the Industrial Biotechnology Association. I would like to begin by thanking you, Mr. Chairman, for your leadership in sponsoring the Biotech Patent Protection Act of 1991.

Let me say that perhaps no single Federal agency has a stronger effect on technology-based industries than the Patent and Trademark Office. Patent protection is absolutely necessary before technological breakthrough can be aggressively pursued.

IBA has three principal concerns that are appropriate to mention during this hearing on PTO reauthorization. First, the backlog of biotech patent applications continues to be worse for us than for any other technology. Second, last year's 69-percent increase in PTO user fees hit hard at small companies and universities. We are concerned that the administration's reauthorization proposal would result in further increases in user fees paid by these inventors. Third, we feel that the current patent law fails to adequately protect some biotechnology processes. This last problem would be remedied by the chairman's bill, S. 654.

Lengthy biotech patent issuance delays continue. For 1989 and the first half of 1990, first action on biotechnology patent applications was made in an average of 13.1 months after filing, whereas first actions in all other technologies averaged 7.1 months. On av-

erage, other patents will issue 8 to 9 months sooner than a biotechnology patent.

The Patent and Trademark Office appears to be seriously and diligently addressing itself to this problem. Unfortunately, while PTO is swimming as hard as it can, it is staying in the same place. Biotechnology patent applications are up 60 percent over 5 years ago, and the backlog has grown by one-third despite the fact that the examining staff has nearly been doubled.

We applaud PTO efforts to expand the biotech examining corps to 200 persons. Unfortunately, while it takes 2 years to train a new patent examiner, and the biotech group suffers at the same time from a 20- to 30-percent annual attrition rate, we fear that the backlog will continue to grow until PTO can improve its ability to retain qualified staff.

The principal problem, we believe, is the low salary level for senior examiners as compared to those in the private sector. As a means to help retain staff, we support PTO efforts to raise the level of pay for senior examiners. Early efforts have reportedly been thwarted by the Office of Personnel Management, and we would like to suggest that perhaps this subcommittee can help them in that regard.

Patent user fees were increased last year by 69 percent, as we have been hearing throughout the afternoon. IBA is now concerned that the patent cost may force small companies and universities to sometime forgo patent protection. This unprotected technology could be scooped up by our foreign competitors.

Mr. Chairman, we would encourage you to ask PTO to provide the subcommittee with data comparing the number of patent applications filed in the first quarter of 1991 to those filed in the first quarter of 1990. It is important to determine whether the number of patent applications has been affected by the 69-percent application fee increase.

The administration reauthorization proposal would eliminate the patent maintenance fee differential for small companies, individuals and universities. IBA believes that eliminating the two-tier maintenance fee schedule would be harmful to small biotechnology firms. We estimate that the removal of this fee differential would cost small biotechnology firms at least $6 million over the life of the 1990 patents alone. Together with the recent 69-percent increase, this would increase the patent cost over 200 percent over the life of a patent for these small patentees. I would point out that 90 percent of biotechnology companies have less than 500 employees, and therefore are, in these terms, small employers.

IBA supports the equitable distribution of other processing services and material costs, and does not object to the rounding out of numbers. But we are opposed to giving PTO the authority to raise fees for certain services so as to provide some services free.

We question the necessity of mandating reauthorization on a 2-year schedule. Congress is already free to conduct oversight hearings as often as necessary. All that is accomplished by a 2-year reauthorization schedule, in our view, is more frequent PTO fee increases.

I now turn to a short discussion of the Boucher bill. On a related issue, IBA is concerned that the U.S. patent law does not offer ade-

quate protection in biotechnology. This is because PTO fails to grant patents for many genetic engineering inventions based on its interpretation of the highly criticized *In re Durden* decision.

If a pioneer company is to invest $100 to $200 million to develop a new biopharmaceutical, it must be assured that a patent will protect it from its competitors. Without such protection, there is simply no incentive to invest, and without investment there can be no new products, no new jobs, no exports, and no new economic growth.

Legislatively overruling *Durden* is imperative to protect the creative and scientific genius of inventors who use biotechnology to produce important new health care, agriculture, and waste clean-up products. We would point out that the chairman's bill, the Biotechnology Patent Protection Act, S. 654, will overrule *Durden* and remedy this situation. In addition to administration support, this bill has broad bipartisan support in both the Senate and the House. Mr. Chairman, we enthusiastically support S. 654.

To conclude my testimony, we feel the PTO must be encouraged to continue to focus resources on the biotech examining corps. All reasonable efforts must be made to reduce the biotech patent backlog application processing time. IBA strongly supports the small firm 50-percent fee differential for patent application, issuance and maintenance, and we believe that congressional action is needed to ensure that new high-tech processes are eligible for patent protection. With very minor amendments, we very strongly support the DeConcini-Boucher bill.

Thank you, Mr. Chairman.

[The prepared statement of Mr. Godown and written questions and answers follow:]

IBA

Industrial Biotechnology Association

1625 K Street, N.W.
Suite 1100
Washington, D.C. 20006-1604
(202) 857-0244
FAX: (202) 857-0237

Directors

Chairman
Jerry D. Caulder
Mycogen Corporation

Vice Chairman
Stephen A. Dutan
Immunex Corporation

Secretary
Charles C. Leighton
Merck & Co., Inc.

Treasurer
Roger H. Salquist
Calgene, Inc.

Alberto E. Adam
American Cyanamid Company

Gordon M. Binder
Amgen, Inc.

Will D. Carpenter
Monsanto Company

John L. Castello
Arco-Sureno, Inc.

Herbert J. Conrad
Hoffmann-La Roche, Inc.

Hugh A. D'Andrade
Schering-Plough Corporation

George W. Dwight
Cytogen Corporation

Jean-Pierre Gentier
SmithKline Beecham Pharmaceuticals

James D. Grant
T Cell Sciences, Inc.

John B. Henry
Crop Genetics International

Dennis M. Langenau
Ortho Biotech

John R. Norell
Phillips Petroleum Company

Edward E. Penhoet
Chiron Corporation

Henry H. Pessner, Jr.
Novo Nordisk of North America

G. Kirk Raab
Genentech, Inc.

George B. Rathmann
ICOS Corporation

Hubert J.P. Schoemaker
Centocor, Inc.

James P. Shorkline
TSI Corporation

Mark B. Skolnicki
Enzytech, Inc.

Henri A. Termeer
Genzyme Corporation

James L. Vincent
Biogen Inc.

STATEMENT

OF

RICHARD D. GODOWN,

PRESIDENT,

INDUSTRIAL BIOTECHNOLOGY ASSOCIATION

REGARDING

REAUTHORIZATION OF THE PATENT AND TRADEMARK OFFICE

BEFORE THE

SUBCOMMITTEE ON PATENTS, COPYRIGHTS AND TRADEMARKS

OF THE

SENATE COMMITTEE ON THE JUDICIARY

APRIL 11, 1991

STATEMENT

Mr. Chairman and distinguished members of this Subcommittee, I would like to thank you for the opportunity to address the important issue of the reauthorization of the U.S. Patent and Trademark Office (PTO), an office on which the ultimate success of the emerging U.S. biotechnology industry may depend.

My name is Richard D. Godown, and I appear before you on behalf of the Industrial Biotechnology Association (IBA), a trade association that represents over 100 companies engaged in biotechnology research and development in the fields of health care, agriculture, food and industrial enzymes, and toxic waste degradation. Collectively, IBA members represent more than 80% of all biotechnology R&D investment in the United States.

Let me first thank you, Mr. Chairman, for your leadership in sponsoring the Biotechnology Patent Protection Act of 1991 and for your consistent support of the U.S. biotechnology industry. We are also especially appreciative of the Vice Chairman's support, not only on this Committee, but on the Labor and Human Resources Committee as well.

The protection of intellectual property rights is of critical importance to the biotechnology industry. Biotechnology is an important new source of economic vitality for America.

American scientists invented genetic engineering and American investors have funded the research and development that is enabling our industry to translate cutting-edge science into economic growth. Patents are a necessary, but not sufficient condition of earning a return on this investment.

The U.S. is currently the world leader in the research, development, and manufacture of biotechnology products, producing 1990 sales estimated at $2.9 billion, including export sales of $600 million. Both of these figures are almost ten times those for 1986 and are expected to more than double in the next two years.[1] The recently-released report from the President's Council on Competitiveness projects the domestic biotechnology industry's revenue to increase to $50 billion by the year 2000, and many believe this to be a conservative estimate.[2]

On October 22, 1987, while addressing the Industrial Biotechnology Association, then-Assistant Secretary and Commissioner of Patents and Trademarks Donald J. Quigg spoke of the importance of patents to biotechnology and the importance of biotechnology to us all:

> Of all the technologies encompassed by

---

[1] G. Burrill & K. Lee/Ernst & Young, Biotech 91: A Changing Environment, Fifth annual survey of business and financial issues in America's most promising industry, 29-35 (October 1990).

[2] The President's Council on Competitiveness, Report on National Biotechnology Policy, Cover Memorandum To the President from Vice President Dan Quayle, Chairman (February 1991).

> practice before the Patent and Trademark Office, none is faster-growing, none is more exciting, and none holds a greater promise of benefit to mankind than biotechnology. My job as commissioner is to see that the patent system continues to encourage new technology and that it does not get in its way.
>
> Along the pathway between inventive conception and commercialization, the patent system has the potential for being either a bridge or a roadblock...[3]

For biotechnology, most of the bridges and most of the roadblocks run through the U.S. Patent and Trademark Office (PTO). For this very reason we are very pleased to testify before you today concerning the reauthorization of the PTO.

Three issues concerning PTO are of great importance to the biotechnology community and will be addressed in this testimony. First, IBA is concerned with the backlog of biotech patent applications. PTO takes too much time before beginning a first office action and issuing a biotech patent. Second, we are concerned by the Administration's reauthorization proposal, both because more frequent adjustments of PTO user fees will result in these fees going up faster and because we object to the elimination of the maintenance fee differential for small start-up firms, individuals and non-profits. Third, we are concerned that some biotechnology processes are not being protected by the

---

[3] See also Backlog of Patent Applications at the U.S. Patent and Trademark Office and its effect on Small High-Technology Firms: Hearing Before the House Subcomm. on Regulation and Business Opportunities of the Comm. on Small Business, 100th Cong. 2nd Sess. 100-59 (March 28, 1988).

patent system. Unfortunately, the U.S. Court of Appeals for the Federal Circuit's decision in In re Durden, 763 F. 2d 1406, 266 USPQ 359 (Fed. Cir. 1985), is often a barrier to obtaining these patents.

Investment in Biotechnology Research and Development (R&D)

One of the distinguishing characteristics of our industry is the extraordinarily high level of investment made in research and development (R&D). Since our industry's inception in the late 1970s, biotech companies have ploughed billions of dollars into long-term R&D programs. There is no better way to concretely illustrate the magnitude of this investment than by citing the findings of a recent survey of our industry published by the Ernst & Young High Technology Group.[4]

R&D as a percentage of product sales is a measure routinely used in established industries to gauge the proportion of today's product sales being reinvested in research towards tomorrow's products. The pharmaceutical industry, which is one of the most innovative industries in the country, averages 16% reinvestment. By comparison, the Ernst & Young survey found that the biotechnology industry reinvests an average of 63%.

Even though biotechnology product sales are rising, R&D

[4] G. Burrill & K. Lee/Ernst & Young, supra note 1.

45-117 0 - 91 - 6

expense as a percentage of product sales is rising faster. Between 1988 and 1989, medical diagnostic firms moved from 35% of sales to 54%, biopharmaceutical firms rose form 104% to 125%, and agricultural biotechnology firms moved from 116% to 146%.

Another way of measuring investment in innovation is to examine R&D expense per employee. In 1989, biotechnology industry R&D averaged $30,000 per employee, with agbiotech companies averaging $39,000 and biopharmaceutical companies averaging $47,000. This compares with an average of $26,000 in the traditional pharmaceutical industry.

In fact, BusinessWeek's special issue on Innovation in America (July 1990) published a list of the top companies in R&D spending in dollars per employee. The top four companies -- Chiron, Centocor, Genentech, and Genetics Institute -- are all biotechnology companies.

Yet another way financial analysts examine commitment to innovation is to measure R&D as a percentage of expenditures and see whether that percentage is rising or falling. Ernst & Young found that R&D accounts for 40% of all costs incurred by biotechnology companies and that 71% of all biotech companies have increased their R&D expenditures in the past year. The average increase was 30%.

The biotechnology industry is one of this country's most R&D intensive industries, perhaps even the most R&D intensive industry.

Delays in Examining Biotechnology Patent Applications

IBA believes that the long patent backlog for biotechnology patent applications continues to have a negative impact on research and development. Timely issuance of patents is needed to attract investors and thereby fund science and technology research. This is particularly true for the small start-up firms that often have no assets other than their proprietary technology. A firm may have conducted favorable research and developed products that show great promise, but if it has no patents it will have a very difficult time attracting the investment necessary to continue its research and development.

IBA believes that PTO is seriously and diligently addressing itself to this problem. We urge this Committee to support PTO's efforts to increase the number of persons examining patent applications, increase the retention rate for examiners, and increase the efficiency of their work.

This past year, 9385 new biotech applications were filed with PTO, a 60% increase from just five years ago. Troubling is the fact that the number of backlogged biotechnology patents is

one-third more than the previous year, despite the fact that staffing has nearly doubled.[5] For 1989 and the first half of 1990, first actions on biotechnology applications were made an average of 13.1 months after the filing, whereas first actions in all technologies averaged 7.1 months.[6] It averages 26.7 months for a biotech patent to be issued, compared to 18 months for other patents.[7]

Contributing to the problem is that for the last five years, the filing of biotechnology applications has grown at an annual rate of 14.9%, double that of all patent applications (7.5%). With each day, another flood of biotech patents arrives at the PTO to begin the long and arduous journey through the patent process. The patent office is swimming as hard as it can, but it's staying in the same place.

Perhaps no single federal agency has a stronger effect on technology-based industries than the PTO. Patent protection is absolutely necessary before technological breakthroughs will be pursued. This backlog, combined with impediments to protecting biotechnological processes, threatens this Nation's most promising new industry.

---

[5] S. Derra, Patents Bury Biotech,22 R&D Magazine (12/90).

[6] Biotechnology: Processing Delays Continue for Growing Backlog of Patent Applications, (GAO/RCED-90-231BR, Sept. 28, 1990).

[7] Id.

PTO has made serious efforts to correct this imbalance and Congress must encourage and insist PTO continue to direct resources to the biotech area. We applaud PTO efforts to expand the biotech examining corps (Group 180) to 200 persons. Group 180 has grown from 80 examiners in 1988 to 136 at the end of 1990, a 70% increase. Two hundred examiners will represent a welcome and needed step to address the backlog problem.

Almost one-third of the biotechnology companies surveyed by Ernst & Young believe they have benefitted from PTO efforts of this past year to improve the processing of biotechnology patents. More than three in four expect continued gains in the future.[8]

In addition to adding examiners, Group 180 needs other resource help, such as computer terminals for each of its biotech examiners and help with retaining its staff. PTO staff frequently refer to the difficulty in recruiting, training, and retaining the highly skilled biotechnology examining staff. The biotechnology examining corps annually suffers from a 20% to 30% turnover rate. As a result, to increase Group 180 from 110 examiners to 136, PTO had to recruit 52 examiners and transfer three senior examiners from elsewhere in the PTO. To reach the goal of 200, PTO intends to recruit 60 examiners in 1991 and 1992

[8] G. Burrill & K. Lee/Ernst & Young, supra note 1.

-- a ratio of about two recruits for each additional position.[9]

A means to help the retention rate is to raise the pay rates of the senior examiners to compete with industry. PTO efforts to accomplish this have reportedly been thwarted by the Office of Personnel Management.

IBA strongly believes that timely approval of new biotechnology patents is in the public interest. Science and technology progress will lead to economic growth and development for the United States both here and in international markets. We believe the government must encourage the pioneer spirit of entrepreneurialism that plays so prominent a role in the development of science and technology.

Patent and Trademark Fees

In October 1990, PTO raised user fees by 69%. We do not yet know the impact this drastic increase has had on our industry and, in particular, on small start-up firms. It may have resulted in a reduction in patent filings. We are concerned that cost constraints may force small companies and universities to leave unprotected technologies that can be scooped up by our foreign competitors.

---

[9] See, e.g., Charles Warren, Deputy Director of PTO Group 180, Remarks at the "Patent and Trademark Office Day" Conference in Washington, D.C., 12/05/90, (F-D-C Reports 12/10/90).

Mr. Chairman, we would encourage you to ask PTO to provide the Subcommittee with data comparing the number of patent applications filed in the first quarter of 1991 to those filed in the first quarter of 1990 to determine whether the number of patent applications has been affected by the 69% application fee increase.

IBA Opposes Elimination of Two-Tier Maintenance Fee Schedule For Small Firms, Individual Inventors and Universities

IBA opposes any action to remove or reduce the two-tier fee schedule that presently allows small firms, individuals and universities to pay one-half of the fees assessed to large companies. Therefore, we oppose the Administration proposal to eliminate the existing small company differential for maintaining a patent in force.

Of special concern to the biotechnology industry is the effect on small companies, for which user fees are most likely to be truly burdensome. Congress and this Administration have sought to encourage the development of small businesses and the Administration has identified biotechnology as one of the three most exciting frontiers now being explored to unlock the secrets of life for the benefit of all; removal of all or a part of the small firm fee advantage could stifle that.

Elimination of the two-tier maintenance fee schedule would have a major financial impact on small biotechnology firms. While 3,135 biotechnology patents were issued in 1989, 18,534 biotechnology patent applications were pending and 9,385 new applications were filed during 1990. If half of the latest patent applications were filed by small firms and half of these result in an issued patent, 2,346 patents could be impacted by the elimination of the two-tier fee schedule. Assuming these figures are correct, small biotech firms could be forced to pay an additional $6 million over the life of their 1990 patents alone.

IBA supports Equitable Distribution of Other Fees

At present, PTO is required to set fees for non-specified processing, services, and materials at estimated cost. The Administration proposes to do away with this restriction. While IBA does not object to the rounding of odd numbers for PTO's administrative convenience (such as charging $1.00 for services that either cost $0.75 or $1.25), we are concerned with PTO's proposal for authority to raise fees for certain services so as to provide other services free.

For example, since October 1990, most biotechnology patent applications must be submitted using a special computer program

available from the PTO.[10] The IBA supported this application change as a means to speed up the patent examination process and raise patent quality. PTO originally estimated the cost of purchasing the computer program at $50 but its final cost is $400.

We do not know if the PTO underestimated the cost of this computer program or if the price was calculated so as to subsidize services used elsewhere in the PTO. We would object to the latter.

Operating costs for processing, services, or materials that are not specified elsewhere should be either appropriated by the federal government or collected equitably from those who benefit by its use or existence. Therefore, IBA is troubled by the Administration proposal for authority to force these costs upon the users of the system through higher fees for other services. This is particularly true for revenue needed to fund the public search room and library.

Two Year Reauthorization Schedule

IBA questions the necessity of mandating biennial reauthorization of PTO. This Subcommittee may conduct oversight

[10] DOC/PTO Requirement for Patent Applications Containing Nucleotide Sequence and/or Amino Acid Sequence Disclosures, 37 C.F.R. Part 1 (May 1, 1990).

hearings as often as it deems necessary during the current three year reauthorization cycle. All that is accomplished by a two year reauthorization schedule is it permits PTO user fees to be raised a year sooner than presently permitted.

IBA does support close Congressional monitoring of the biotech patent backlog problem, and we would welcome more frequent adjustments to the allocation of resources especially to address this problem. However, as Congress already has the power and authority to exercise frequent oversight, IBA opposes PTO user fee increases every two rather than three years.

Where the Administration proposes to provide Congress every two years with "such other information as the Committees consider necessary", we would encourage you to ask the PTO to provide the Subcommittee with relevant data and a status report concerning the biotechnology patent backlog problem and the action the PTO is instituting to solve this problem.

Inadequacy of Patent Protection

In deciding whether to fund an R&D program, biotech companies must determine whether the expected product life, market potential, and competitive situation warrant the investment. Clearly, if a pioneer company is to invest $100 to $200 million to develop a new biopharmaceutical, it must be

assured that a competing company cannot pirate the pioneer's intellectual achievements.

The great cost of developing a new biotechnology product stands in stark contrast to the ease with which the product can be copied. Under these circumstances, the only incentive to make such investments is the availability of clear and meaningful patent protection. Without such protection, there is simply no incentive to invest, and without investment, there can be no new products, no new jobs, no new exports, and no new economic growth.

While modern biotechnology is generally considered to have begun with the first recombinant DNA experiment in 1973, it was not until 1980 -- when the U.S. Supreme Court held that a genetically engineered microorganism was patentable -- that biotechnology companies began forming to commercialize recombinant DNA technology. This decision, Diamond v. Chakrabarty, 447 U.S. 303 (1980), suggested that "everything under the sun made by man," including biotechnological inventions, is patentable. Consistent with this principle, genetically engineered plants became patentable in 1985 and genetically engineered animals became patentable in 1987. To most observers (including the investment community), it appeared that patent protection had become as fully available to biotechnology as to other technologies, and the apparent

availability of meaningful patent protection has been an important factor in continued growth in biotechnology R&D.

Unfortunately, U.S. patent law does not offer adequate protection for this new technology. This is because the U.S. Patent and Trademark Office has refused to issue process patents for many biotechnology inventions, based on its interpretation of In re Durden, 763 F. 2d 1406, 266 USPQ 359 (Fed. Cir. 1985), a heavily criticized case decided by the U.S. Court of Appeals for the Federal Circuit.

Since 1985, it has become increasingly difficult to obtain process patent protection in the United States for genetic engineering inventions. The reason is that the PTO has often rejected claims to these processes as "obvious" in light of the prior art describing very general biotechnological processes. This reasoning is derived from the analysis contained in In re Durden.

Basically, Durden's reasoning, as interpreted by the Patent and Trademark Office, is as follows: The basic process of recombinant DNA is known. It consists of inserting a molecule of deoxyribonucleic acid (DNA) into a living cell so that the cellular machinery produces whatever protein that particular DNA molecule codes for. If the inventive process is divided into small steps, each step is obvious. So, if you invent a new DNA

molecule and use it in a recombinant process, you cannot patent the process for using that new molecule. Why? Because, once you have invented a DNA molecule, it is obvious that it can and should be used in a recombinant DNA process.

Virtually all legal commentators and practitioners have concluded that Durden was wrongly decided and is applied in a fashion that wrongly denies process patent protection. (See, e.g., Wegner, "Much Ado About Durden," 71 Jour. Pat. & Trademark Off. Soc'y. 785 (1989); Murashige, "Section 102/103 Issues in Biotechnology Patent Prosecution," 16 AIPLA Quart. Jour. 294 (1988-89)).

Durden says, in effect, that it is obvious how to use an invention that never existed before. As a result, in many cases, one can only obtain a process patent in biotechnology if one can demonstrate that "unexpected results" occurred during the use of the otherwise "obvious" process. When "unexpected results" cannot be shown, process patent protection cannot be obtained.

Even when "unexpected results" can be demonstrated, some applications are still rejected as "obvious." (A recent case, Ex parte Orser, 14 USPQ 2d 1987 (Bd. of Pat. App. and Inter. 1990), illustrates how the Patent and Trademark Office rejects biotechnology process claims based upon Durden even when the

applicant shows unexpected and superior results based upon how the biological materials affected the claimed process.)

In the best case scenario, Durden rejections can sometimes be overcome if the applicant is prepared to persevere and incur added expense. This means that inventors with limited budgets, such as small companies and universities, are placed at a distinct disadvantage, and that even those who overcome Durden rejections may have issuance of their patents needlessly delayed for six or eight months. This delay can jeopardize a company's ability to raise the capital necessary, for example, to conduct animal and human studies of a new drug's safety and effectiveness.

Furthermore, our members report that whether a Durden rejection is made varies from patent examiner to patent examiner, so that the luck of the draw -- that is, which patent examiner is assigned their case -- is a significant factor in determining whether they will obtain process patent protection.

After repeatedly hearing anecdotes about the inconsistency with which Durden is applied, one of IBA's member companies commissioned a search of Patent and Trademark Office biotechnology file histories to examine the use of Durden rejections. They found that, anticipating a Durden rejection, inventors and their attorneys have often avoided, or at least

delayed, the Durden problem by electing to first prosecute claims to products per se or to methods of use. This often results in (1) actual or apparent abandonment of process patent protection; or (2) a substantial delay in issuance of process claims. Both of these results were evaluated.

Abandonment of process protection was evaluated by looking at patents which lacked process claims. Of these, at least 60% were directly linked to a Durden rejection. In the other 40%, the process claims were dropped following an interview, quite possibly due to discussions of an actual or implied Durden rejection. This finding is consistent with our belief that Durden has had a damaging effect on process patent protection for the U.S. biotechnology industry.

The issue of delay was evaluated by searching for patents which contained process claims, then evaluating the file histories to determine whether a Durden rejection had been made but later overcome. In two-thirds of the patents containing process claims, a Durden rejection was made and overcome during prosecution. In one-third of the cases, no Durden rejection was made, supporting more casual observations that the Durden rejection is being used in an arbitrary and inconsistent manner.

Perhaps the most accurate measure of the negative effects of Durden rejections was found in those patents lacking process

claims. The damaging effect of a Durden rejection falls most heavily on those who lack the resources to pursue process patents. It appears that the effort and costs associated with the prosecution problems created by an actual or anticipated Durden rejection resulted in the abandonment of process protection. All four universities in the study -- Wisconsin, Johns Hopkins, California, and Columbia -- forfeited the process patent protection to which they appear to be entitled.

We should note that there is no such limitation on obtaining process patents in Europe or Japan. Both of these legal systems have a strong tradition of protecting process patents. The Congress should not overlook the fact that our competitors are already providing their inventors with the kind of process patent protection that we seek.

S. 654 would remedy this problem. Section 2 of the bill codifies the holding of In re Mancy, 182 USPQ 203 (C.C.P.A. 1974), and other cases, and provides that the reasoning of the Durden case does not apply. In Mancy, a process for preparing a daunorubicin using a new strain of Streptomyces, different from those strains which were already known to produce daunorubicin but using basically the same culture techniques, was upheld. The facts in Mancy are analogous to the preparation of antibodies by culturing a previously unknown hybridoma or other immortalized cell. We believe the same reasoning should apply to these cases

as applied in Mancy.

IBA believes that the legislation corrects an unintended effect of an inconsistently applied patent office approach derived from a poorly decided Federal Circuit case that denies biotechnology the advantages of the Process Patent Amendments Act of 1988. This is legislation that was intended to benefit this industry, as demonstrated by the House and Senate Judiciary Committee reports.

We note that an earlier version of this legislation was aimed at overruling Durden only in the context of biotechnology. This approach was rejected by IBA's Patent Committee largely based on representations from our major pharmaceutical and chemical member companies who argued that Durden was wrongly decided and damaging to their industries as well, and therefore should be addressed in a comprehensive manner.

Critics have claimed that the legislation, if enacted, would give automatic patent protection for processes regardless of whether they offer major or minor contributions. We believe this objection is unfounded. It overlooks the fact that the scope of the patent would be limited to, or defined by, the particular material utilized in the process. As is the case for all patents, the breadth of the patent would vary in proportion to what the inventor has taught.

For example, if the novel material is an invention of major importance that allows the process to be used to produce a product that could never be produced in commercial quantities before -- as is usually the case with biological materials -- then the process patent would be correspondingly broad. However, if a company invents a trivial material that differs little from other materials used in similar processes, the company would obtain a patent limited to the use of that trivial material in the process. Such a patent would have little value, since infringement could be easily avoided by substituting a different material for the one utilized in the patented process or using other procedures in the literature.

Legislatively overruling Durden is imperative to protect the creative and scientific genius of inventors who use biotechnology to produce important new health care, agricultural, and waste cleanup products. Although continued U.S. preeminence in biotechnology is vital to our economy and our quality of life, it is unlikely that U.S. leadership can be preserved in the absence of adequate patent protection to prevent piracy of our companies' inventions.

The Chairman's bill, the Biotechnology Patent Protection Act (S. 654), will overrule Durden, thereby making it easier for biotech companies to obtain process patents. PTO itself recognizes that Durden is poorly reasoned and inconsistently

applied by its examining corps, and at a hearing in the other body on September 25, 1990, Commissioner Manbeck testified in favor of the bill. In addition to Administration support, the bill has broad bipartisan support in the House and Senate.

IBA's Board of Directors has enthusiastically and unanimously endorsed this bill subject to certain amendments we feel are necessary to make the bill work. We appreciate the interest of the Chairman and his staff in perfecting the legislation.

Conclusion

In conclusion, we in the biotechnology industry believe that the PTO must be encouraged to continue to focus attention and resources on Group 180 and all efforts must be made to reduce the biotechnology patent backlog and application processing time.

PTO user fees must be kept as low as possible and small firms, individuals, and non-profits should retain the 50% fee differential for their patent application, issuance and maintenance. IBA strongly supports federal funding for the PTO public library and search room.

Congressional action is needed to ensure that new high tech processes are eligible for patent protection. We in the

biotechnology industry believe that Senator DeConcini and Congressman Boucher have shown great foresight in introducing the Biotechnology Patent Protection Act. The Industrial Biotechnology Association, with minor mechanical amendments, strongly supports the bill and urges its enactment at the earliest opportunity.

IBA

Industrial Biotechnology Association

1625 K Street, N.W.
Suite 1100
Washington, D.C. 20006-1604
(202) 857-0244
FAX: (202) 857-0237

Richard D. Godown
President

Directors

Chairman
Jerry D. Caulder
Mycogen Corporation

Vice Chairman
Stephen A. Dotan
Immunex Corporation

Secretary
Charles C. Leighton
Merck & Co., Inc.

Treasurer
Roger H. Salquist
Calgene, Inc.

Alberto E. Adam
American Cyanamid Company

Gordon M. Binder
Amgen, Inc.

Will D. Carpenter
Monsanto Company

John L. Castello
Ares-Serono, Inc.

Herbert J. Conrad
Hoffmann-La Roche, Inc.

Hugh A. D'Andrade
Schering-Plough Corporation

George W. Dunbar
Cytogen Corporation

Jean-Pierre Garnier
SmithKline Beecham Pharmaceuticals

James D. Gross
T Cell Sciences, Inc.

John B. Henry
Crop Genetics International

Dennis N. Langemeier
Ortho Biotech

John R. Merrill
Phillips Petroleum Company

Edmund E. Penhoet
Chiron Corporation

Harry H. Penner, Jr.
Novo Nordisk of North America

G. Kirk Raab
Genentech, Inc.

George B. Rathmann
ICOS Corporation

Hubert J.P. Schoemaker
Centocor, Inc.

James P. Sherblom
TSI Corporation

Mark B. Skaletsky
Exxtech, Inc.

Henri A. Termeer
Genzyme Corporation

James L. Vincent
Biogen Inc.

May 9, 1991

The Honorable Dennis DeConcini
Chairman
Subcommittee on Patents,
Copyrights and Trademarks
Committee on the Judiciary
SH-327 Senate Hart Office Building
Washington, D.C. 20510

Subject: Authorization of the Patent and Trademark Office; response to supplemental questions for inclusion in the hearing record.

Dear Mr. Chairman,

Thank you for the opportunity to have testified before your Subcommittee on April 11, 1991. I am pleased to enclose answers to the supplemental questions raised by you and Senator Charles E. Grassley.

Please do not hesitate to call on me for any additional information that you feel will be beneficial to you and the Subcommittee on this or any matter.

Again, thank you for this additional opportunity to participate in your hearing on legislation to authorize appropriations for the Patent and Trademark Office.

Very truly yours,

RDG/rjb
Enclosure
cc: [redacted]

HEARING ON THE AUTHORIZATION OF THE
PATENT AND TRADEMARK OFFICE
QUESTIONS OF SENATOR DeCONCINI
APRIL 11, 1991

Richard D. Godown -- President,
Industrial Biotechnology Association

1) Your organization opposes the Administration's proposal to eliminate the small entity exemption for small businesses, independent inventors and universities. How many of your members fall into this category?

Biotechnology is an industry of small businesses. Of 104 IBA members, slightly more than half -- about 53%, qualify as "small companies," using the Small Business Administration criterion of fewer than 500 employees. While most of IBA's small members are exclusively engaged in biotechnology, very few of the large entities are primarily biotech. Of all freestanding biotechnology companies (both IBA and non-IBA), 99% fall into the small business category.[1]

Indeed, for industry segmentation purposes, the national accounting firm of Ernst & Young categories the biotechnology industry as follows:

- Small companies (defined as having 1 to 50 employees) represent 76% of all biotech companies.
- Mid-size companies (51-135 employees) represent 15% of all U.S. biotech companies.
- Large companies (136-299 employees) represents 6% of all U.S. biotech companies.
- Top-tier companies (300 or more employees) represent 3% of all U.S. biotech companies.

2) Does it make sense to permit a company with 490 employees with revenues in the millions to pay 50% less for patent fees than a company that has 501 employees with maybe less revenue?

3) Why don't we limit the small entity exemption to 100 employees or base it on gross income?

The Small Business Administration has determined that fewer than 500 employees defines a "small company", this standard is universally recognized and understood, and its applicability to user fees at the PTO should not change. While any definition of a "small company" based on number of employees may seem arbitrary with respect to those companies close to the cut off, such "bright line" tests serve the goals of efficient government by eliminating the need for (and costs of) individual determinations. The small company definition of 500 employees thus serves the same purpose as the 18 year old voting age: it provides rough justice, even though a few individuals close to the cut off may be viewed as having been arbitrarily treated.

---

[1] Ernst & Young/G. Burrill & K. Lee, Biotech 91: A Changing Environment, Fifth annual survey of business and financial issues in America's most promising industry (October 1990).

We believe that the current "small company" definition constitutes rough justice for the biotechnology industry. The biotechnology industry is still a very young industry, and only a handful of biotech companies are operating at a profit. Virtually none of the biotech companies with fewer than 500 employees has earned their first profit. To date, only 16 biopharmaceutical products have received market approval. None of these is being marketed by a company with fewer than 500 employees. Without marketable products, biotech companies have no revenue other than investment capital to pay fees or other costs.

IBA believes that if PTO fees are increased small start-up firms will have an even more difficult time funding the R&D necessary to pursue the technological breakthroughs needed for the firm to survive.

The small entity fee differential should not be eliminated or altered.

4) I understand your concern regarding the increasing patent user fees and its tremendous impact on small companies, individuals and universities. IBA, however, supports increasing the number of examiners, providing senior examiners with a substantial pay raise, as well as providing examiners with improved resources. These things all cost a great deal of money and directly affect the patent office's operating costs. Is there a balance between lower user fees and increased service that would be beneficial to IBA?

PTO revenues rise and fall in direct relationship with the delivery of PTO services. As the volume of patent applications grows, PTO revenues are increased by the fees accompanying these new applications. Absent cost of living adjustments, the collection from an increasing number of patent applications and other fees should be adequate to fund increased operating costs resulting from the additional workload.

Congress must ensure that PTO resources are both collected and allocated as fairly and as efficiently as possible. The IBA is concerned that although biotechnology firms pay the same fees for service as all other PTO users, biotechnology applications experience the longest delays in examining and issuance. Resources must be focused on areas of greatest need. Group 180, the biotechnology patent examining corp, is an area of PTO with perhaps the greatest resource needs.

IBA supports increasing the number of examiners in the biotechnology Group 180 because biotechnology patent applications are growing at twice the rate of other technologies.

IBA supports increasing the pay grade for senior examiners because these examiners are more efficient than new examiners. For example, new patent examiners spend a large part of their first two years in training programs, rather than actually examining patents. Furthermore, the patents they examine are subject to review by senior examiners prior to issuance. For these reasons, a senior examiner can handle a much larger workload than a junior examiner.

IBA believes that the lack of higher pay is a major cause of the 20 to 30% annual turnover rate of biotechnology patent examiners. High staff turnover is expensive and inefficient. IBA believes higher pay would reduce turnover, lower recruiting and training expenses, and keep the most proficient workers on the job.

5) How has the Patent Office's administration of a restriction requirement affected the biotechnology industry?

Examiners in the Patent and Trademark Office routinely make restriction requirements, which are found to be acceptable in other countries (no lack of "unity of invention") in which product and process claims are separated and issued in separate patent applications.

The only legitimate grounds for the PTO to issue a restriction requirement is if the patent application contains "separate and distinct" inventions. Under current law, when PTO restriction practice requires such applications to be divided, PTO cannot also insist on including terminal disclaimers in later issuing patents. This is because it would be inconsistent for the PTO to claim, on the one hand, that the process and product claims are different inventions for the purposes of restriction practice, but that they are the same inventions for purposes of a terminal disclaimer.

IBA has reason to believe that PTO sometimes issues restriction requirements for two inappropriate reasons:

(1) to increase fee revenues, since separate fees are collected for each divisional application, and

(2) to generate statistics documenting a larger number of patent dispositions than would otherwise be the case.

Both of these are inappropriate reasons for dividing patent applications. They result in additional costs to patent applicants, not only in terms of multiple fees for application, issuance, and maintenance, but also because of the increased costs of prosecuting multiple patent applications instead of just one. One of our members reports having a single application divided into 51 divisional applications, another reports an application being divided into 36 parts.

The cost of prosecuting numerous patent applications can be prohibitively expensive. Our member companies feel that if the PTO believes the biotechnology industry should incur these costs by determining that the process and product claims are different inventions, then the patentee should have the benefit of a full seventeen year term on each separate patent.

HEARING ON THE AUTHORIZATION OF THE
PATENT AND TRADEMARK OFFICE
QUESTIONS FROM SENATOR CHARLES E. GRASSLEY
APRIL 11, 1991

Richard D. Godown -- President,
Industrial Biotechnology Association

1) You have expressed a concern, along with most of the other witnesses, with the relatively high attrition rate of biotechnology examiners and the impact this has on the quality and speed with which biotechnology patents are processed. What suggestions do you have, aside from increased salaries for senior examiners, for lowering the attrition rate for these highly skilled examiners?

Job satisfaction is the key to lowering the attrition rate of biotechnology examiners. IBA applauds the efforts of the PTO to address these needs, including the establishment of the Biotechnology Institute to promote interaction between the examiners and private industry, better access to computer resources, and larger more attractive working space.

An Administration or Congressional sponsored award or recognition for service to outstanding examiners would assist in attacking the attrition rate. Raising the level of appreciation for work well done should be encouraged and could be instituted by Congress.

2) As a representative of the biotechnology community, what issue concerning the Patent and Trademark Office do you consider to have the highest priority and how would you suggest addressing this issue?

Concerning the Patent and Trademark Office, the issue we consider to have the highest priority is the protection of intellectual property rights.

While we continue to be concerned with the biotech patent application backlog, and both the amount of PTO user fees and the protection of the fee differential for small companies, individuals and non-profits, we are more concerned that some biotechnology process breakthroughs are not being issued patent protection.

In deciding whether to fund an R&D program, biotech companies must determine whether the expected product life, market potential, and competitive situation warrant the investment. Clearly, if a pioneer company is to invest $100 to $200 million to develop a new biopharmaceutical or $10 to $20 million to develop a new agricultural biotech product, it must be assured that a competing company cannot pirate the pioneer's intellectual achievements.

The great cost of developing a new biotechnology product stands in stark contrast to the ease with which the product can be copied. Under these circumstances, the only incentive to make such investments is the availability of clear and meaningful patent protection. Without such protection, there is simply no incentive to invest, and without investment, there can be no new products, no new jobs, no new exports, and no new economic growth.

Unfortunately, U.S. patent law does not offer adequate protection for this new technology. This is because the U.S. Patent and Trademark Office has inconsistently acted to issue process patents for many biotechnology inventions, based on its

interpretation of In re Durden, 763 F. 2d 1406, 266 USPQ 359 (Fed Cir. 1985), a heavily criticized case decided by the U.S. Court of Appeals for the Federal Circuit.

Since 1985, it has become increasing difficult to obtain process patent protection in the United States for genetically engineered inventions. The reason is that the PTO has often rejected claims to these processes as "obvious" in light of the prior art describing very general biotechnology processes. This reasoning is derived from the analysis contained in In re Durden.

Virtually all legal commentators and practitioners have concluded that Durden was wrongly decided and is applied in a fashion that wrongly denies process patent protection. (See, e.g., Wegner, "Much Ado About Durden," 71 Jour. Pat. & Trademark Off. Soc'y. 785 (1989); Murashige, "Section 102/103 Issues in Biotechnology Patent Prosecution," 16 AIPLA QUART. JOUR. 294 (1988-89)).

We should note that there is no such limitation on obtaining process patents in Europe or Japan. Both of these legal systems have a strong tradition of protecting process patents. Congress should not overlook the fact that our competitors are already providing their inventors with the kind of process protection that we seek.

The DeConcini - Hatch bill, the Biotechnology Patent Protection Act (S. 654), would remedy this problem. Section 2 of the bill provides that the reasoning of Durden case will not apply.

IBA believes that the legislation corrects an unintended effect of an inconsistently applied patent approach derived from a poorly decided Federal Circuit case that denies biotechnology the advantages of the Process Patents Amendments Act of 1988. This is legislation that was intended to benefit this industry, as demonstrated by the House and Senate Judiciary Committee reports.

Legislatively overruling Durden is imperative to protect the creative and scientific genius of inventors who use biotechnology to produce important new health care, agricultural, and waste cleanup products. Although continued U.S. preeminence in biotechnology is vital to our economy and our quality of life, it is unlikely that U.S. leadership can be preserved in the absence of adequate patent protection to prevent piracy of our companies' inventions.

S. 654 will overrule Durden, thereby making it easier for biotech companies to obtain process patents. PTO itself recognizes that Durden is poorly reasoned and inconsistently applied by its examining corps, and at a hearing in the other body on September 25, 1990, Commissioner Manbeck testified in favor of the bill. In addition to Administration support, the bill has broad bipartisan support in the House and Senate.

IBA's Board of Directors has enthusiastically and unanimously endorsed this bill subject to certain amendments we feel are necessary to make the bill work. We appreciate the interest of the Senators and their staff in perfecting the legislation.

We believe that the industry's highest priority concerning PTO is intellectual property protection for biotechnology processes and the best way to address this issue is to enact S. 654 with minor mechanical amendments at the earliest opportunity. IBA would appreciate Senator Grassley's support for the bill.

Senator DECONCINI. Thank you.
Dr. Goldberg.

STATEMENT OF HERBERT S. GOLDBERG

Dr. GOLDBERG. I am pleased to have the opportunity, Mr. Chairman, to speak about the universities' relationship to this issue. Unlike the others, I don't have a constituency, but I like to think that our university is fairly representative.

My name is Herbert S. Goldberg and I appear on behalf of the patent program of the University of Missouri System. I am the chair of a patent committee which has patent responsibility for the university, with four campuses currently holding 82 U.S. patents and 22 foreign patents.

In 1990, the university had received from various external sponsors approximately $53 million in research support, and this is the background for the development of invention disclosures. In that year, approximately 50 inventions were disclosed and 6 patents issued. The university, in the 1990–91 current academic year, first three quarters, has earned $500,000 from faculty royalties and fees. Incidentally, a minimum of one-third of the total royalty income goes to the faculty inventors.

Of all the institutions that have difficulty bringing inventive concepts to commercialization, the university has the most difficult pathway to traverse. University goals and objectives are primarily in the teaching and research missions. Their faculty discoveries are usually not product-oriented, and consequently cooperative and collaborative ventures with industry are often called for, but not always immediately forthcoming.

However, in order to protect its intellectual property, the university must often begin patent application out of its own resources, and here the newly enacted patent fees create a serious problem.

The recently enacted patent fee schedule, which increased to 69 percent and then has potential to increase even further, concerns us seriously. The majority of inventions developed within a university setting are in the very earliest stages of development. The university must have the revenue available to protect these inventions in the early stages to enhance their marketability. Prohibitive fees lessen the chances that universities will have the funds available to protect many valuable discoveries. This also relates to the maintenance fees which occur three times during the lifetime of the patent.

Now, universities are on the cutting edge of scientific discovery. Patents are issued to universities several years before a commercial use or product is identified. That means there is no income rolling in. In these cases, many universities will find it necessary to allow valuable patents to lapse before commercialization can be realized. The patent protection needed by industry to pursue commercialization may not be available from the universities.

If industry files a patent application in behalf of a university—let us assume it is a large corporation and pays a large inventor fee. In the event that the license is canceled, the university has to assume the responsibility not of the reduced entity fee that the university would have initially, but rather the one that is started

by the large corporation. So universities are different as you look at them from this point of view.

Most universities are soliciting reimbursement for patent filing expenses as part of any license fees, but with increased costs such as these, it will be more difficult to convince industry—remember, they are getting their potential license very early in terms of potential products—it would be difficult to convince industry to enter into licensing agreements for early-stage inventions. Currently, early-stage inventions solicit a much lower royalty rate because of the up-front risk for industry. Again, these increased fees increase the risk factor by another significant margin.

Another fee issue of concern is the change to lump, total miscellaneous fees instead of each fee at an estimated cost. That is sort of unfair for those that may not use the subsidized service, and we believe one should pay for the service that they are using, not get caught up in that umbrella.

Of course, we are opposed to any change in the two-fee system, which would cost the universities the same fees as the larger entities. Inordinate delays in patent backlog for biotechnology is very important to us because they make up the bulk of our disclosures. Faculty inventors are frustrated by restrictions on publication. They don't even want to enter into an agreement because it keeps them from publishing, at least for 1 year. And so it is very difficult to cajole faculty inventors who may have great ideas into entering into these requirements, and all the strings that result, impacting on the time factor, make it even more difficult.

I also understand that on the biotechnology issue it takes about—the Commissioner was talking about 18 months, but it is about one-third longer for biotechnology patents. So we would like to see an expansion of the examiner group in the biotech field because we have two medical schools, a dental school, a veterinary school, and agriculture and pharmacy, and they are producing in the biotechnology area.

The issue of the reauthorization frequency from 3 years to 2 may be a good idea. We all know that the shorter the need for projections, the more precise the projections.

Again, I would like to support patenting of process, and would comment on Senate bill 654. It looks sound. It will help us compete with the Japanese and the others, and it will put us in a position where the university is involved in many process patents, or potential patents.

So our summary says that we support the issues of the two-fee system; that is, to keep our differential down from the larger companies. We would like to see Federal funding for the search and public library facilities. That brings up the automation question, which we have yet to resolve. Finally, again, we support the Biotechnology Patent Protection Act because we think that is significant.

Thank you.

[The prepared statement of Dr. Goldberg and written questions and answers follow:]

Statement of
Herbert S. Goldberg, Associate Dean
School of Medicine, Professor of Microbiology
Chairman of the Patent Committee of the
University of Missouri concerning:
Reauthorization of the Patent and Trademark Office before the
Subcommittee on Patents, Copyrights and Trademarks of the
Senate Committee on the Judiciary

SUMMARY

The University of Missouri is a four campus system which holds 82 U.S. patents and 22 foreign patents. In 1990, 50 inventions were disclosed and 6 patents issued. The 1990-91 income from intellectual property licenses and fees has been approximately $500,000 for the first three quarters of this academic year.

Universities have much difficulty bringing inventive concepts to commercialization. University goals and objectives are primarily in teaching and basic research. Faculty discoveries are not product oriented and consequently cooperative and collaborative ventures with industry are necessary. However, in order to protect its intellectual property, the university must often begin patent application out of its own limited resources. Here the newly enacted patent fees create a problem. The 69% fee increase has the potential to stifle university patent application. Above all, the small entity fee should be maintained for patent application, issuance and maintenance. Direct fees should be avoided for all use of library and paper search files.

We agree that authorizing legislature may increase precision an workload and funding estimates when based upon a two year, rather than a three year program.

The extended backlog of biotechnology patent issuance is of concern. Recommendations for increased recruiting and retention should be applauded.

In the realm of adequate patent protection, we should like to add a related note to include the support of pending bill S654. This would enable adequate process patenting and improve opportunity to compete internationally since Europe and Japan already have smooth pathways to process patents.

Mr. Chairman and subcommittee members: I am pleased to have the opportunity to address the reauthorization of the U.S. Patent and Trademark Office (PTO).

My name is Herbert S. Goldberg and I appear on behalf of the patent program of the University of Missouri system. I am the Chair of the Patent Committee which has patent responsibility for the University with four campuses, currently holding 82 U.S. patents and 22 foreign patents. In 1990, the University had received from external sponsors approximately 93 million dollars (annualized) for instruction, research, student aid and public services. In that year approximately 50 inventions were disclosed and 6 patents issued. The 1990-91 income from intellectual property licenses and fees has been approximately $500,000 for the first three quarters of this academic year. A minimum of 1/3 of total royalty income goes to faculty inventors.

Each year for the past six years I have organized a national meeting on Patents, Licensing and Biotechnology Transfer during which various universities present their models for managing intellectual property.

Of all the institutions that have difficulty bringing inventive concepts to commercialization, the university has the most difficult pathway to traverse. University goals and objectives are primarily in the teaching and research missions. Their faculty discoveries are not product oriented and consequently cooperative and collaborative ventures with industry are often called for but not always immediately forthcoming. However, in order to protect its intellectual property, the university must often begin patent application out of its own resources and here the newly enacted patent fees create a serious problem.

The recently enacted patent fee schedule will increase universities' initial filing costs from $585 to $995 per patent. Overall user fees were raised 69%. A majority of inventions developed within a university setting are in the very early stages of development. The university must have the revenue available to protect these inventions in these early stages to enhance their marketability following further development. Prohibitive fees will lessen the chances that universities will have the funds available to protect many valuable discoveries.

To maintain its validity over the seventeen year life of an issued patent, fees are required at the 3 1/2, the 7 1/2, and the 11 1/2 year milestones. These fees, in total, will increase considerably. Universities are on the "cutting-edge" of scientific discovery. Often

times, patents are issued to universities several years before a commercial use of product is identified. In these cases, many universities will find it necessary to allow valuable patents to lapse before commercialization can be realized. The patent protection needed by industry to pursue commercialization may no longer be available.

If industry files a patent application on behalf of a university, it is required to pay the large inventor fees for the application. The filing fees for large inventors will also increase substantially. The maintenance fees (that may eventually have to be paid by the university if the license is canceled) will greatly increase. Most universities are soliciting reimbursement for patent filing expenses as part of any licensing fees. With increased costs such as these, it will be much more difficult to convince industry to enter into licensing agreements for early stage inventions. Currently, early stage inventions solicit a much lower royalty rate because of the up-front risk for the industry. These increased fees will increase this risk factor by another significant margin.

Another fee issue of concern is the potential elimination of the current setting of non specified fees at estimated costs. The new suggested proposals would raise fees for some services to subsidize other services. This is unfair for those that may not use the subsidized service and will nevertheless be paying for it.

Finally, we are opposed to any change in the two tier system which would cost the university the same fees as the large companies.

The inordinate delays in patent backlog for biotechnology is particularly disturbing to the university. Faculty inventors are frustrated by restrictions on publication and often have to be cajoled into filing inventive disclosures which puts a publication delay on their research results. I understand that biotechnology patents take 33% longer to issue than other patents.

PTO efforts to expand the biotechnology examiner group is to be applauded. Our institution with two medical schools and dental, veterinary, agriculture, and pharmacy schools is heavy in biotechnology disclosures. The highly skilled technology examining staff must be rewarded to maintain a high retention rate and to enhance recruiting. We hope the PTO can bring this about.

Reduction of reauthorization frequency from three years to two may have some advantages. Projections on workload and budget are at best difficult and not precise. The

longer the projections the greater the difficulty and the less precise the results.

ADEQUACY OF PATENT PROTECTION

We are familiar with Senate Bill 654 which deals with Biotechnology Patent Protection. The university is particularly concerned about the issue of process patents. To the degree that most university inventive work is basic science oriented it is much less directed at new products. Oftentimes basic processing techniques are invented at the university level and followed by new products which may ultimately emerge as the university collaborates with industry. It is critical to the university-industry cooperative endeavors that a bill like S654 be approved to clarify this issue of patentability.

S654 will legislatively overrule Durden and protect the creative and scientific contribution of inventors contributing to biotechnology's role in producing new products. It will enhance university success in working with the private sector in producing new competitive products and will put the U.S. on a level with European and Japanese inventors who already have process patent protection.

In summary, it is our view that PTO application, issuance and maintenance user fees should be kept low as possible and the maximum (50%) differential for the university and other small and not-for-profit institutions should be maintained.

We support continued federal funding for the search and PTO public library facilities.

We support the Biotechnology Patent Protection Act and its speedy enactment.

UNIVERSITY OF MISSOURI-COLUMBIA

School of Medicine

Office of the Dean

MA204 Medical Sciences Building
Columbia, Missouri 65212
Telephone (314) 882-1566

April 30, 1991

Senator Dennis DeConcini
Hart Senate Office Building
SH328
Washington, DC 20510

Dear Senator DeConcini:

Thank you for your recent letter. The questions you pose are answered below. I have also enclosed a copy of a patent and biotechnology program I have organized that may be of interest to one of your staff.

1. How does your university operate its budget for patent fees?

   Our patent fee budget has been fixed up to this point in time. Our response to the increase in fees has been to dedicate a percent of royalty income as add on to the fixed budget for that purpose. However, only a small portion of the royalty income comes to the university patent office. The majority of all royalty income goes to the inventor, his/her department and campus. Also, of course, since royalty income is variable from year to year, we must rely heavily on our fixed budget for patent fees.

2. What effect would changing our patent system from a first-to-invent system to a first-to-file system have on universities?

   A first-to-file system would play havoc with our university patent program. Unlike for-profit institutions, we have a cumbersome bureaucracy in which chairs, deans and the president has to sign off on patent documents, we do not have in-house patent attorneys and we have to prod and cajole faculty into filing disclosures since teaching and research are their highest priorities. It would be very difficult to direct all of this to a fast track patent filing system.

3. How helpful would S.654 be for universities that are involved in biotech research?

   As regards S.654 the university is particularly concerned about the issue of process patents. To the degree that most university inventive work is basic science oriented, it is much less directed at new products. Often basic processing techniques are invented at the university level and followed by new products which ultimately

   emerge as the university collaborates with industry. It is critical to the university-industry cooperative endeavors that a bill S.654 be approved to clarify this issue of patentability which impacts most importantly on biotechnology.

an equal opportunity institution

4. Besides providing needed protection to biotech inventions, wouldn't S.654 reduce the backlog in biotech patent applications?

While indeed S.654 will decrease the backlog of biotech patent applications to some degree since it clarifies the controversy over various pending biotech patent process applications, however it will not respond to the need for increased numbers of examiners to review the biotechnology applications which are filed at a rate almost twice that of other patent applications. This is further complicated by the turnover rate of examiners. One approach to recruitment and retention is to increase the pay rates for the biotechnology examiners. Persons with their skills are in demand in industry and salaries should be competitive. Finally, computerizing the system will go a long way towards speeding up the process.

5. I understand that often a university must apply for a patent before many uses and products resulting from a discovery are fully realized. As a result, it the Patent Code was amended permitting universities to obtain patents on subsequent products, would this provide the incentive to universities and industry to fully develop these "premature patents"?

The university often attempts to patent its disclosures early in order to be attractive to industry. One drawback of that action is that patent claims at that time do not have the benefit of the sophistication which results after the collaboration and R & D with industry. As a result since current law only permits one patent the university is caught up in premature patenting. If extension was made possible to fully develop the patent subsequently this would be of great incentive to the university and industry.

Question from Senator Charles E. Grassley - As a representative of a university that is primarily involved in teaching and basic resaerch, what specific impact has the recent surcharge on patent fees had on the university's ability to enter into licensing agreements with commercial enterprises?

While it is somewhat early to know the overall impact of increase user fees raised in October 1990, in our situation we are inhibited because of fixed budgets, from patent filing on all those disclosures we might wish to file on. For example, on this date, April 30, 1991, we have a moratorium on any patent filings until our next fiscal year, July 1, 1991. This means all disclosures over the next two months will have to languish.

Sincerely,

Herbert S. Goldberg, Ph.D.
Associate Dean for Research
and Academic Affairs

/car
Enclosure

Senator DECONCINI. Dr. Goldberg, thank you very much. I appreciate that analysis, and indeed it is a good one that I think is very applicable to so many universities and medical schools in my own State. I thank you for that. It was very, very helpful.

Mr. Partoyan.

STATEMENT OF GARO PARTOYAN

Mr. PARTOYAN. Mr. Chairman, good afternoon. My name is Garo Partoyan. I am general counsel of marketing and technology for Mars, Inc., in McLean, VA, but I am here today not in that capacity, but rather as the president of the U.S. Trademark Association.

The U.S. Trademark Association, or USTA, is a 113-year-old not-for-profit organization. Its membership has grown from zero in the early years, of course, to approximately 2,200 members at the present time from across the United States and about 80 different countries.

Among its goals are the support and advancement of trademarks as an essential element of effective commerce, and also the protection of the interests of the public through the use of trademarks. So, for those reasons, USTA has a keen interest in the pending Patent and Trademark Office reauthorization bill, and particularly in that portion of the bill which would allow trademark user fees to be reprogrammed or reallocated to functions in the Patent and Trademark Office having nothing to do with trademarks.

This is not a trivial or a technical matter. Rather, it is an important matter because in the long term allowing reprogramming not only will harm the Trademark Office, but will also not help the Patent Office to get its house in order.

Starting in 1982, at the direction of Congress, the Trademark Office became 100 percent user fee-funded; that is, trademark operations were no longer provided with general taxpayer subsidies. To prevent those user fees from being diverted to other Federal programs, this committee and Congress built a protective fence; namely, the simple principle that trademark fee moneys could only be used for trademark matters.

The collection of those user fees and the protective fence, however, did more than to make the trademark operations self-funding. It played a major role—indeed, a crucial role—in changing an operation that once had been characterized as a national disgrace into a self-sufficient office that is a model of efficiency, economy and service. That is what this committee and Congress did by making the Trademark Office self-sufficient and fully responsible for obtaining its own revenues.

That financial self-sufficiency continued to work to the advantage of the Trademark Office, the trademark community, and to the general public. Since the implementation of its user fee systems, there has been a marked expansion and upgrade in the professional examining staff; an increase in library and research facilities, including LEXIS and NEXIS capabilities; a large expansion in the Trademark Office's physical facilities—for example, the move to take place to the South Tower in Crystal City; and other not as obvious but significant improvements in the automation system and the response time in examining applications.

But all of that progress is threatened if this protective fence is torn down; that is, if trademark user fees are allowed to be reprogrammed for nontrademark activities. There are some noticeable shortcomings in the proposed reprogramming. For reallocation of amounts less than $500,000, no congressional approval is required. There is no limitation on how often trademark user fees could be shifted to nontrademark activities.

It does not provide for any formal procedure for substantive input by members from the trademark community; for example, the Patent Office's own Public Advisory committee for Trademark Affairs. And there is no procedure to account for moneys that have been reprogrammed in the next year's fiscal appropriations. That means that trademark projects will be delayed because money will be reprogrammed from them, and the delays could be indefinite and indeed projects could die as a result.

Mr. Chairman, the trademark user fees and the fence protecting them turned around the Trademark Office, not without pain. Reprogramming authority, however, would be a large step backward, perhaps even to the days when the Trademark Office was unable to control its own resources and its own revenues.

We should also look at the patent side of this matter. The patent operations are now to be 100 percent user fee-funded. Just as in the case of the trademarks, this should encourage and enable the Patent Office to put its patent operations in financial order.

Access to funds from trademark fees, however, would serve as a disincentive on the patent side, a disincentive to controlling costs and to establishing proper fees. Taking bricks from one side of a foundation to shore up its other side does not make the foundation stronger. Put a little bit differently, you can give a man a fish to feed him for a while, or you can teach the man to fish and then he can feed himself forever. Reprogramming should not be the fish that is given to the patent operations.

Mr. Chairman, this committee's past efforts and continuing concern for the Trademark Office have led to great progress. The USTA urges you not to undermine that progress by tearing down the fence that ensures that trademark fees are used only for trademark matters. This is a very simple principle and there is no reason to depart from it.

We have submitted a written statement that is much more expansive than these comments, sir. I do invite your attention to that, and I will be happy to answer any questions you have. Thank you.

[The prepared statement of Mr. Partoyan and written questions and answers follow:]

U.S. Trademark Association

THE USE AND PROTECTION OF FEDERAL TRADEMARK USER-FEES FOR FEDERAL TRADEMARK ACTIVITIES

The United States Trademark Association ("USTA") appreciates and welcomes the opportunity to testify on Patent and Trademark Office ("PTO") reauthorization legislation. USTA looks forward to maintaining its excellent relationship with the Committee and hopes that the Committee will continue to use the Association as a resource on those legislative issues relating to preservation and advancement of trademarks throughout the nation and the world.

My name is Garo A. Partoyan and I presently serve as USTA President. I am also the General Counsel for Marketing and Technology of Mars, Inc., a USTA member company. Like all the officers, Board members, Committee Chairpersons and Committee members of the Association, I serve on a voluntary basis.

USTA is a 113 year-old not-for-profit membership organization. Since its founding in 1878, its membership has grown from twelve New York-based manufacturers to approximately 2200 members that are drawn from across the United States and about 80 countries.

Membership in USTA is open to trademark owners and to those who serve trademark owners. Our members are corporations, non-profit institutions, advertising agencies, professional and trade associations, and law firms. USTA membership crosses all industry lines, spanning a broad range of manufacturing, retail and service operations. Members include both small and large businesses and all sizes of general practice and intellectual property law firms. What this diverse group has in common is a shared interest in trademarks and a recognition of the importance of trademarks to their owners and to consumers.

USTA has five principal goals:

- To support and advance trademarks as an essential element of effective commerce throughout the world;
- To protect the interests of the public in the use of trademarks;
- To educate business, the media and the public to the importance of trademarks in our international economy;
- To play an active leadership role in matters of public policy concerning trademarks; and
- To provide a comprehensive range of services to its members that includes keeping them informed of current trademark developments and in touch with professional colleagues.

USTA POSITION ON PATENT AND TRADEMARK OFFICE REAUTHORIZATION LEGISLATION

The currently proposed U.S. Patent and Trademark Office reauthorization legislation contains language authorizing the PTO Commissioner to reprogram monies from the annual Trademark Office fiscal year budget, as well as incoming and reserve revenues, to non-trademark activities. USTA strongly opposes any legislation which would permit the reprogramming of any portion of the annual federal trademark budget, as well as any existing or reserve monies accrued from these fees, that are designated exclusively for trademark activities.

LEGISLATIVE HISTORY OVERVIEW OF THE TRADEMARK FEE SYSTEM

The first trademark fee system operated from the turn of the century until 1982 when the PTO's current fee system was implemented. Under the original system, fees were specifically set in the Trademark Statute. Income generated by those fees was deposited in the General Treasury. Fees were seldom increased but their relative stability had minimal effect on PTO resources because the fee income generated was not considered in the appropriations process and the PTO generally received adequate funding.

The situation changed in the 1960's and 1970's when appropriations failed to keep pace with the Office's needs and, as a result, trademark operations began to deteriorate. Ironically, despite private sector support, efforts to increase trademark fees as a way of supplementing the PTO's funding were unsuccessful because trademark fee increase legislation was routinely coupled with controversial substantive proposals to amend patent laws. The failure to provide adequate funding had both obvious and disastrous consequences, and in the late 1970's the Trademark Office was labeled a "national disgrace."

In 1980, a new fee system, to become effective in 1982, was approved by Congress (P.L. 96-517). This system departed from the previous system in several respects: (i) it removed the fee-setting mechanism from Congress and gave the PTO Commissioner the authority to set fees; (ii) it implemented the concept of cost recovery; and (iii) it provided that fee income would supplement General Fund appropriations. Under this system, costs incurred by the PTO were divided into three categories identified in the House Judiciary Committee Report (House Report 96-1307, Part 1) as:

1. Costs which should be paid entirely from appropriated funds because they "go to meet the responsibility of the Federal Government to have a PTO in order to execute the law." (House Report 96-1307, Part I). Specifically included among them were the costs of operating the public search rooms and costs of capital improvements such as the automation program the PTO was planning.

2. Costs which should be paid partly from appropriated funds and partly by user-fees because they go to support activities that benefit both the general public and applicants. These were the costs that could be attributed to the actual processing of applications and would be shared "50/50" by the Federal government and those registering trademarks (or seeking patents).

3. Costs which should be paid for 100% by user-fees because they provide services to private parties and confer no direct benefit to the general public (for example, photocopies, certification services).

While USTA expressed some concern for example, with allocating, on a percentage basis, the costs and benefits of the PTO's processing of applications to register trademarks, it found the underlying principles of this system equitable. However, the system suffered from two major deficiencies. First, although it was intended to give the PTO the resources it needed to meet its obligations and to provide improved service to those registering trademarks through a system whereby the government and the private sector (registrants) shared costs, it contained no assurance that fee income could not be diverted to other government activities. In fact, within six months of the law being passed, an effort was made to move up the effective date of this new system so that the income could be used to fund juvenile justice and drug enforcement programs at the Department of Justice. Second, those who had agreed to pay higher fees received no assurance that the government would live up to its side of the bargain; while they had agreed to pay a share of the costs of maintaining the patent and trademark systems, there was no guarantee that the government would fund its share. And it never did.

Before the then current fee system enacted under P.L. 96-517 could be implemented, PTO reauthorization legislation, which included a provision to double, from 50% to 100%, trademark registrants' portion of the costs that were to be shared, was introduced. This proposal, by merging the second and third categories of costs identified above, suggested that trademark owners who register their marks were the only beneficiaries of the Federal Trademark Statute (the Lanham Act). It also meant that current trademark registrants would be "footing the bill" for clearing the immense backlogs that had resulted from years of appropriations and budgetary neglect by Congress and the Department of Commerce.

USTA argued that this change would undermine the purposes of the Lanham Act. Congress agreed. It rejected the proposal for a statutory requirement that trademark fees recover 100% of the PTO's costs, adopting instead a proposal that the Lanham Act provide simply that the Commissioner be given the authority to set trademark fees (15 USC 1113). USTA also argued that the law should create a "fence" around trademark user fees, that is, specifically prohibit the use of trademark fee income for

anything but federal PTO trademark-related activities and a provision to this effect was enacted into law (35 USC 42(c)).

What USTA failed to anticipate at the time, however, was that the Administration would interpret this new law (P.L. 97-247) as authority to recoup, through fees, all of the PTO's trademark-related costs -- including those previously identified as necessary to meeting the Federal government's responsibility. To achieve this, it began transferring expenses, most notably those associated with automation, into the trademark processing line item of the PTO's budget and shifting others, for example, the public search room into the customer services line item. In sum, it successfully pursued every possible means to eliminate, through the assessment of fees, the General Fund support necessary to execute the Federal Trademark Statute.

When the 99th Congress reauthorized the PTO (P.L. 99-607), it reacted to public criticisms that the PTO was abusing its fee-setting authority and placed limitations on it. Stating that "the Office's public mandate is more important than cost recovery" (Senate Report 99-305):

- It reiterated its intent that the PTO's costs be divided into three categories, commenting that fee income was not to be used to reduce the level of public support for the Office;
- It strictly prohibited the imposition of fees for use of the PTO's search rooms saying "[t]he public patent and trademark search rooms and libraries are to be wholly supported by appropriated funds;"
- It tied trademark fee increases to changes in the Consumer Price Index;
- And, it stipulated that a certain portion of the PTO's costs of automation must be paid for out of General Fund revenues -- a requirement that the PTO has, to a great extent, ignored and now, because of its general user-fee structure, must forego.

Today, Trademark Office activities and operations are totally funded by trademark user-fees.

REASONS FOR OPPOSITION TO THE PROPOSED REPROGRAMMING AUTHORITY

It is against this background and the recently enacted sixty-nine percent surcharge on certain patent-related fees which makes the PTO fully user-fee funded (with the exception of a $3,000,000 appropriation from the General Treasury) that USTA opposes the PTO reauthorization measure, and specifically, the reprogramming provision found in subsection 3(b).

It is important to recall that patent and trademark fees have been treated and funded separately since Fiscal Year 1983 thus,

the new user-fee funding issues currently confronting the Patent Office have nothing to do with trademark user-fees except as a possible alternative to increased Patent user-fees (a "pocket to pick"). Consequently the Association finds that the proposed reauthorization legislation is inadequate to protect the interests of the trademark community and provide for the assurance of continued resources of the Trademark Office in meeting both its immediate needs and long-term interest in serving the public for the following reasons:

- Present trademark budget procedures and the consequent reserve fund were established during a period (Fiscal Years 1983 - 1990) when the Trademark Office was the sole PTO component which was 100% user-fee funded. Since the Trademark Office's budget and reserve monies do not use taxpayer subsidies but come from private fees, trademark monies not allocated solely to meet common Trademark Office functions or that Office's share of common administrative support and informational overhead activities should not be used by other PTO divisions;

- Both user-fees collected and reserve fund monies budgeted by the Trademark Office continue to play a crucial role in increasing the capabilities and efficiencies of the Trademark Office in responding to applicant and registrant needs. If the proposed reprogramming legislation is adopted, long-term trademark operations upgrades scheduled to use a portion of trademark revenues may be placed on hold indefinitely should the Commissioner's Office decide that trademark funds are necessary to cover another PTO division;

- The Commissioner need not obtain congressional approval for reprogramming Trademark Office revenues under one-half million dollars (or 10% of the project's cost, whichever is less). Thus, an opportunity exists for the routine taking of at least 10% of a project costing less than $5,000,000. Additionally, proposed language does not limit the frequency of reprogramming requests. Even should congressional approval be necessary, the procedure is essentially pro forma allowing the reprogramming request to become effective automatically fifteen days from when Congress receives notice of the request unless an objection is raised by an appropriate member of Congress;

- Many Association members also may have patent interests requiring them to use the Patent Office. Nevertheless, the patent and trademark communities are two different constituencies with varying intellectual property perspectives. Consequently, wherever feasible, budgets for patent and trademark operations should remain segregated. The ability of one office, however

infrequently, to take funds accepted for another purpose serves as a disincentive to control costs as well as maintain reasonable fees.

- o The Trademark Office has shown marked improvement under its current user-fee structure in effect for nearly a decade. Tinkering with an office that now serves as a model of efficiency, economy and service through the proposed reprogramming authority is to risk compromising the Trademark Office's effectiveness.

ALTERNATIVE LANGUAGE

USTA recommends that subsection 3(b) of the Patent and Trademark reauthorization bill be amended as follows:

f. Subsection 42(c) of title 35, United States Code is amended as follows:

"(c) Revenue from fees will be available to the Commissioner of Patents and Trademarks to carry out, to the extent provided for in appropriations Acts, the activities of the Patent and Trademark Office. Fees available to the Commissioner under Section 31 of the Trademark Act of 1946, as amended (15 U.S.C. 1113), shall be used exclusively for the processing of trademark registrations and for other activities, services, materials and support functions related to trademarks.

The appropriate provision in the "Section-by-Section Analysis" should be revised to read as follows:

Subsection (b) would amend subsection 42(c) of Title 35 by amending the last sentence that presently precludes the use of trademark fees for any activity or support function except "the processing of trademark registrations and for other services and materials related to trademarks." When this provision was enacted, other activities and support functions of the Office that were necessary to support the operations of Trademarks were to be funded with appropriated taxpayer monies, not trademark fee revenues. Particularly, the Congress recommended that certain other "activities," including legislative, international, and outreach programs and similar governmental support functions were expected to be funded from taxpayer support. Now that all PTO operations must be funded essentially out of fee revenues, it is reasonable to provide for the limited extension of the use of trademark fees to support the actual cost of the portion of other activities and support functions in the PTO related to trademarks.

While omitting reprogramming language, these changes acknowledge the necessity of modifying the limitation regarding the use of trademark fees solely for trademark purposes to be used to pay actual costs for certain activities, such as legislative, international and outreach programs, and for certain direct and

indirect support functions, such as personnel, procurement, and similar functions that previously were paid from appropriated monies.

CONCLUSION

In the long-term, the proposed reprogramming authority would not just provide potential support for Patent Office shortfalls; it would bring the Trademark Office closer to the pre-1982 period when trademark operations, then frequently described as a "national disgrace," had to plead for adequate funding and the PTO Commissioner's favor. Moreover, since the premise of 100% user-fees is that users should pay their own way, the reprogramming of trademark user-fees would constitute nothing less than a tax without benefit to the trademark community.

I am pleased to respond to any questions or concerns of the Committee on this matter.

U.S. Trademark Association

6 EAST 45TH STREET, NEW YORK, NY 10017
TELEPHONE 212-986-5880 TELEX 175662 USTA UT FAX 212-687-8267

May 3, 1991

The Honorable Dennis DeConcini
Chairman
Subcommittee on Patents, Copyrights and Trademarks
United States Senate
327 Hart Senate Office Building
Washington, D.C. 20510-6275

Dear Senator DeConcini:

Thank you for your very kind letter regarding my testimony before your Committee on trademark related aspects of S. 793, the Patent and Trademark Office (PTO) reauthorization bill. The hearing provided a valuable opportunity for USTA to share with your Committee its concerns with respect to the operations and administration of the PTO. Per your request, find enclosed responses to the Committee's supplemental questions for inclusion in the record.

As always, USTA appreciates your efforts to advance the role of trademarks as an essential element of effective commerce. If I or the Association can be of further service to you and the Committee, do not hesitate to call.

Very truly yours,

Garo A. Partoyan
President

**USTA RESPONSE TO SUPPLEMENTAL QUESTIONS
FROM SENATOR DeCONCINI
PERTAINING TO THE APRIL 11, 1991 HEARING
ON THE AUTHORIZATION OF THE PATENT AND TRADEMARK OFFICE**

Garo Partoyan -- President, The United States Trademark Association

1. Isn't it understandable that the Patent Office may want to have the flexibility to use trademark funds in cases of an unanticipated shortfall in patent fees and vice-versa if there is a shortfall in trademark fees to have access to patent fees?

The Patent Office may wish this flexibility but USTA believes it would not be in the public interest. From the nearly decade long experience of the Trademark Office as a fully user funded office, the Association realizes that the transition of the Patent Office to the exclusive reliance on user-fees is not easily accomplished. Nevertheless, because trademarks and patents are very different forms of intellectual property, user-fees submitted for the registration and handling of trademark and patent requests, respectively, serve widely variant functions. Consequently, we take strong exception to the funneling of trademark user-fees to non-trademark programs and initiatives no matter their particular urgency or merit. In addition to compromising the financial integrity of the Trademark Office, congressional approval of such a practice would impose a charge with no connection to the purported benefit or service thereby creating a tax that discriminates unfairly against one segment of the public (i.e., trademark owners).

Conversely, we believe that the Trademark Office, by paying careful attention to its fee structure, can function effectively and efficiently without acquiring user-fees intended for other purposes.

2. How would you feel about language that clarifies and limits the circumstances in which the Patent and Trademark Office can reprogram fees?

USTA believes that the issue is not one of refining S. 793's reprogramming provision but rather one of providing for the proper use and control of trademark user-fees in a PTO facing total reliance on user-fees for its operations and activities. Because patents and trademarks are fundamentally different forms of intellectual property, their respective fees are for essentially different services, benefits, and protections. As such, these user-fees are simply not fungible and, subject to congressional oversight, should remain under firm control of their respective offices.

Since the Commissioner's Office has the primary role in framing and approving PTO's budget, any need for additicnal funds in either the Patent or Trademark Office is likely to reflect unsatisfactory but correctable planning. Thus, the transfer of trademark user-fees through reprogramming is a shortsighted solution which would create a disincentive for controlling Patent Office costs and maintaining reasonable trademark fees.

Senator DECONCINI. Thank you, Mr. Partoyan. You know, your feeling is understandable from the trademark point of view not to let reprogramming be used for something else, but what if you put the shoe on the other foot where there might be a shortfall in the Trademark Office some time and they would want to reprogram money from the patent side of it, or some place else, to support the shortfall in the trademark area?

I guess I am trying to find out whether or not there is a middle ground here where it might be used only in the Patent Office or in the Trademark Office and no other place for reprogramming. I don't know enough about the revenue flows there, but what if that were the case where trademarks didn't have enough to carry out its area and had to reprogram some money? Wouldn't that be very important to the Office to be able to get the money?

Mr. PARTOYAN. It is a question of control, I believe, sir. As the legislation is, our view is that there are not adequate controls built in. Now, over the 8 years that the trademark operation has been self-funding, a reserve has been built up. I would consider the amount of the reserve to be appropriate and commensurate in the circumstances—a bit of a sinking fund, you could say, that any prudent business would want to have against a rainy day or a bad year.

I would think that the patent operation, in being self-funding, should be able to achieve that same objective; in other words, to create a cushion over a period of time.

Senator DECONCINI. Do you know how much that is? I don't know. Do you know how much that surplus is?

Mr. PARTOYAN. I probably shouldn't speculate, but the number $24 million is in the back of my mind.

Senator DECONCINI. Does anybody know?

Mr. HUTHER. Senator, at the end of the previous fiscal year the amount was approximately $16 million.

Senator DECONCINI. Sixteen million?

Mr. HUTHER. Yes, and it is forecast at the end of fiscal year 1991 that approximately $4 or $5 million will be left in the trademark reserve.

Mr. PARTOYAN. So that means it is on the way down already.

Senator DECONCINI. Let me ask you, Mr. Huther, is that because it is being used for the other side?

Mr. HUTHER. No. We continue to follow the provisions that affect the use of trademark money only for trademark purposes. The investments that are being made now with respect to trademark automation, the new building that Mr. Partoyan mentioned, and other expenses are the sole purposes for the use of this money.

Senator DECONCINI. I see. That is where the so-called surplus is going to?

Mr. HUTHER. Yes, sir.

Senator DECONCINI. And after that is finished, those investments, and what have you, then it should build up again?

Mr. HUTHER. Well, based on the fee proposals that the Commissioner has testified to today, we would not forecast having the large surplus that has grown in the prior years. There would be a modest one, but not of the order of magnitude currently.

Mr. PARTOYAN. Senator, I think there is still room that moneys could be reprogrammed, not just moneys from a reserve which has been built up.

Senator DECONCINI. That is a good point, that is a good point. What if they could only be reprogrammed and only used in the Patent Office? I don't know that they couldn't be reprogrammed and used some place else.

Mr. PARTOYAN. It is my understanding that they would have to be used in the Patent Office because it is a Patent and Trademark Office appropriations matter. That would not take care of our concerns.

Senator DECONCINI. That wouldn't satisfy you, but can Commerce reprogram that money?

Mr. HUTHER. No, sir.

Senator DECONCINI. They can't?

Mr. HUTHER. It would require a separate appropriation act.

Senator DECONCINI. It would, OK. So it can only be reprogrammed within your Office, as it is now. Thank you.

Well, gentlemen, I have no further questions for the hearing today. I may give you some, and Senator Grassley has some questions, if you feel inclined to give us some answers. We are struggling with this problem and maybe you have some ideas for us.

Thank you very much for being here.

Mr. PARTOYAN. Thank you, Mr. Chairman.

Senator DECONCINI. The record will remain open for 30 days for anybody who wants to submit further information, and the subcommittee will stand in recess. Thank you.

[Whereupon, at 3:22 p.m., the subcommittee was adjourned.]

APPENDIX

ADDITIONAL STATEMENTS



Frito-Lay,Inc.

Ronald R. Kranzow
Senior Vice President
Legal Counsel

April 4, 1991

The Honorable Dennis DeConcini
Chairman
Senate Subcommittee on Patents,
Copyrights and Trademarks
328 Hart Senate Office Building
Washington, D.C. 20510-0302

Dear Dennis:

I am writing to bring to your attention proposed Patent & Trademark Office legislation, which if enacted, could have a negative effect on the ability of the Trademark Office to remain responsive to the needs of the trademark community and the general public. Your trademark reform legislation during the 100th Congress resulted in a comprehensive and important updating of our federal trademark law. I am concerned that the current PTO reauthorization bill would weaken the Trademark Office's ability to implement the new system by allowing user-fees earmarked exclusively for trademark activities to be used for PTO activities that do not, in any way, benefit the trademark community. The legislation will be considered by your subcommittee on April 11th.

Despite many beneficial and necessary changes in the draft measure, I am opposed to bill language (Subsection 4(f) amending Subsection 42(c) of Title 35, U.S.C.) that would eliminate, loosen or otherwise alter (in the present case, through the reprogramming process) the existing requirement that user-fees earmarked exclusively for trademark activities not be used elsewhere. This protective "fence" surrounding trademark fee revenues, you might recall, results from Fiscal Year 1982 legislation stipulating that the Trademark Office recover one hundred percent of the cost of its operations. Because of the heretofore different funding structures of the two major PTO offices and previous calls for the use of trademark user-fees for non-trademark programs, Congress stipulated that trademark revenues were to cover only trademark-related expenses.

Although I note Assistant Commissioner for Finance and Planning Brad Huther's statement at the February 26, 1991 meeting of the Public Advisory Committee for Trademark Affairs that it is not contemplated that a reprogramming of trademark revenues would occur under circumstances other than the inability of another PTO division, such as the Patent Office, to meet its obligations due to an unanticipated shortfall, I can find no such limitation in the draft bill. Even if there were such language, however, I see no warrant for permitting the invasion of trademark funds for patent or other purposes.

I also believe that elimination of the fence surrounding trademark revenues is inappropriate for the following reasons:

- Present trademark budget procedures and the consequent reserve fund were established during a period (Fiscal Years 1982-1990) when the Trademark Office was the sole PTO component that was one hundred percent user-fee funded. Since the Trademark Office's budget and reserve monies do not use taxpayer subsidies but come from private fees, trademark monies not allocated solely to meet Trademark Office functions or a share of common PTO administrative overheads should not be used by other PTO divisions.

- Both the federal trademark budget and the reserve fund continue to play a crucial role in increasing the capabilities and efficiencies of the Trademark Office in responding to the needs of applicants, registrants and the public. If the proposed reprogramming legislation is adopted, long-term trademark operational upgrades scheduled to use a portion of trademark revenues might be placed on hold indefinitely in the event it is determined that trademark funds are necessary to cover another PTO division.

- The Commissioner's Office need not obtain congressional approval for reprogramming Trademark Office revenues under one-half million dollars (or ten percent of the project's cost, whichever is less). Thus, an opportunity exists for the routine taking of at least ten percent of a project costing less than five million dollars. Even should congressional approval be necessary the procedure is essentially pro forma allowing the reprogramming request to become effective automatically fifteen days from when Congress receives notice of the request unless a specific objection is raised. Further, proposed language does not limit the frequency of reprogramming requests.

- With the exception of equitable portions for common administrative, support and informational overhead programs, the respective budgets for patent and trademark operations should remain segregated. A strong reason is that the ability of one office, however infrequently, to take funds submitted and accepted for another purpose serves to undermine incentives to control costs and maintain reasonable fees.

I am grateful that, under your chairmanship, the Trademark Office has become an increasing source of pride to the trademark community and the public. Its progress is noteworthy. I hope you agree that the possible use of trademark user-fees for PTO activities that do not, in any way, benefit the trademark community represents a significant diminishment of the Trademark Office's ability to control both its long and short-term operations and plans.

As always, I appreciate your thoughtful consideration and leadership on matters vital to the trademark community.

Very truly yours,

Ron

Ronald R. Kranzow

cc: Janis Long, Counsel
Subcommittee on Patents, Copyrights and Trademarks

WISCONSIN ALUMNI RESEARCH FOUNDATION

Telephone: (608) 263-2831

May 16, 1991

Dennis K. Burke, Esq.
327 Hart Senate Office Building
Washington, D.C. 20510

Dear Dennis,

As a follow up to our phone conversation yesterday, you will find enclosed a statement on S. 793, the Patent and Trademark Office authorization bill which is submitted for entry into the record on behalf of the Association of University Technology Managers and the American Council on Education. I am sorry for the delay in getting this to you, and hope it hasn't caused any inconvenience.

Warmest regards,

Howard

Howard W. Bremer
Legal Consultant

enclosure: S.793

tk\burke.ltr2

P.O. BOX 7365 • MADISON, WISCONSIN 53707-7365 • TEL (608) 263-2500 • FAX (608) 263-1064

STATEMENT

ON BEHALF OF
THE

ASSOCIATION OF UNIVERSITY TECHNOLOGY MANAGERS
AND
AMERICAN COUNCIL ON EDUCATION

SUBCOMMITTEE ON PATENTS, COPYRIGHTS AND TRADEMARK

COMMITTEE ON THE JUDICIARY

UNITED STATES SENATE

ON S. 793

TO AUTHORIZE APPROPRIATIONS FOR THE
PATENT AND TRADEMARK OFFICE

Mr. Chairman and Members of the Subcommittee:

The organizations which I represent here today, and I, personally, am pleased to have this opportunity to present our collective views on S. 793, to authorize appropriations for the Patent and Trademark Office.

The Association of University Technology Managers is a professional association of individuals, primarily from universities, who are engaged in or connected with the transfer of technology from the university sector to the marketplace, for the most part by utilizing the patent system. The Association currently has over 700 members and represents in its membership over 200 universities and patent management organizations.

The American Council on Education represents over 1600 colleges, universities and associations in higher education.

The university community is vitally concerned with intellectual property and intellectual property-related legislation among which S. 793 is included. Since the passage of Public Laws 96-517 and 98-620, the provisions of which have been incorporated into title 35 of the United States Code and Chapter 37 of the Code of Federal Regulations, universities, and particularly the major research universities, have mounted a substantial technology transfer effort through the patenting and licensing of inventions made on their various campuses.

Although the number of U.S. patents issued to universities, or to patent management organizations associated with

universities, is not large in comparison with the total number of patents issued by the U.S. Patent and Trademark Office in any given year, since the passage of Public Law 96-517, the number has been increasing every year since 1980 to the point that by 1988 universities received about 2% of all patents issued. This is an increase from 0.9% in 1978. In addition, the number of universities participating in the patenting effort has also increased. For example, in 1989, 144 universities had at least one patent issued and in the period from 1980-1990 universities had over 7000 patents issued to them.

More importantly, the patents issued to universities, since they most often are generated during the course of basic research, tend to form the building blocks for fundamental innovation. In a recent probability sample study[1] of 76 major American firms in 7 manufacturing industries, executives responded that a substantial proportion of new products and processes introduced between 1975 and 1985 depended upon academic research and development in that they either:

- could not have been developed (without substantial delay) in the absence of academic research; or
- were developed with substantial aid from recent academic research.

[1]Mansfield, "Science and Engineering Indicators", 1989, copy attached.

These data are also significant in that they are indicative of ongoing cooperative effort as between industry and universities in enhancing the competitiveness of the United States in a global economy. Moreover, it is fully expected that this cooperation will increase since the university sector performs about 65% of the basic research in the United States, the bulk of that effort being supported by various government agency funds. Since invention without innovation benefits no one, appropriate legislation, which not only recognizes the universities as an important source of invention, but also aids university-industry cooperation to develop those inventions, is essential to the transfer of university-generated technology for the benefit of the public.

Because of the budgetary constraints under which universities must operate and because their primary missions are education and basic research, universities seldom have unlimited discretionary funds available to pursue patenting. Consequently, any increase in the cost of obtaining patent protection is of great concern to their collective technology transfer function.

In addition, most university inventions, arising as they do out of basic research, tend to be embryonic in nature. They tend not to be product oriented and require a great deal of development to bring them to the market. To accomplish that end, the universities seek a commercial partner, with which they can collaborate and cooperate, to do the necessary development. However, the absence of, or limited, patent protection makes it

very difficult to find and obtain the necessary commitment of a commercial entity to product development. The right to exclude others afforded by patent protection is considered a necessity to calling forth the risk capital necessary to the development effort. Therefore, any legislative change which increases patenting costs will limit the ability of universities to obtain the patent protection necessary to the collaborative effort with the commercial (private) sector. The public can thus be deprived of the benefits which can flow from basic research.

If adequate patent protection is precluded because of the cost factor, the results of basic research, which are almost always published by universities, can only inure to the benefit of foreign companies and countries. Such situation places the United States at risk in its ability to compete on a global basis. Therefore, Congress must consider very carefully any legislation which results in a decrease in our ability to establish a competitive base. It appears that on the one hand the Administration and Congress is driving to make the United States more competitive on a global basis, but on the other hand is taking away the ability to do so by pricing the United States patent system out of the market for many United States inventors. The positions represented by such respective activities are antithetical.

In the two-tier system of fees established in the United States Patent and Trademark Office, the universities qualify for small entity status unless the particular invention for which

fees are to be paid is licensed or becomes licensed to a party that is considered a large entity. Considering the seminal or embryonic nature of most university inventions, it is unusual that a given invention will be licensed at the time of filing a patent application. Therefore, the universities can enter the system as a small entity, paying only small entity fees. However, it is not unusual for the commercial state of the art to lag the technology embraced by many university inventions for several years. For that reason, university inventions tend to be licensed years after filing. Given those circumstances, as a practical matter, universities must consider that they themselves will have to inevitably pay the issue fee on a filed application as well as the maintenance fees at least at 3 1/2 and 7 1/2 years as called for in S. 793 if they wish to maintain a position for licensing.

What should also not be overlooked in this situation is the fact that probably the bulk of inventions emanating from university research have been made with the expenditure of some monies supplied by Agencies of the Federal Government. The basic premise must be that those Federal monies are spent on research so that, ultimately, the public will benefit from the results of that research. Of all the research and development done in academia in 1989, the Federal Government provided about 59% of the funding or about $6.5 billion, about 2/3 of that went to support basic research. If the public is to ultimately benefit, inventions emanating from that research will require development

by the private sector. If the private sector has no incentive, in the form of patent protection established by the universities, it will not elect to develop the seminal or embryonic invention. Hence, the premise for Federal support of the research will never be realized. The ultimate loser will be the public.

The enactment of the Budget Reconciliation Act of 1990 (P.L. 101-508) on November 5, 1990, which increased statutory patent fees by 69% caused grave concern in the university community that the ability of universities to continue to file patent applications on significant inventions would be eroded because of the added cost imposed by that surcharge. This concern was enhanced by the fact that the surcharge had the practical effect of being applied retroactively since it applied not only to fees for prosecuting patent applications but also to fees for maintaining a patent in force. Such surcharge alone was viewed as not only discouraging the filings of patent applications but causing universities to abandon existing patent rights on basic inventions prior to the time that the commercial state of the art was at the point that the inventions could be considered candidates for further development by the private sector.

This problem would be exacerbated by the proposed increase in "small entity" fees under the provisions of S. 793. The loss of "small entity" status for the issue fee and the maintenance fees, added to the 69% surcharge imposed last year would even more seriously erode the ability of universities to protect many

valuable discoveries which offer the potential for later development by the private sector for the public benefit.

Another factor which must be taken into consideration is the impact which increased patent fees would have on university-industry collaboration and the technology transfer function through licensing. In many collaborative and licensing arrangements between universities and industry the industrial partner finances the patenting and maintenance costs. If the licensee is considered a large entity under the current two-tier system, large entity fees must be paid after consummation of the licensing arrangement. It has been the experience of the university sector that large entities are extremely cost conscious. Consequently, with the increased patent fees already imposed on large entities it will make it much more difficult to persuade an industrial partner to enter into a licensing arrangement for undeveloped inventions or those at a very early stage of development. As a consequence, the university sector believes that further increases in large entity fees as a way of retaining the two-tier fee system now in effect would also be counterproductive to the transfer of technology from universities to the marketplace.

The fundamental purpose in the passage of Public Laws 96-517 and 98-620 was to promote the transfer of technology developed with the use of Federal funds from universities, non-profit institutions and small business. Those laws have been effective in fulfilling the premise that the public should benefit from

Federal support of research by increasing the flow of technology into the hands of the public. What has been accomplished by the foresight of Congress evidenced in the passage of those laws as a means to increase the ability of the United States to compete in a global market could well be lost through the imposition of burdensome patent fees on those entities and particularly universities.

There are even those who view a totally user-fee-supported Patent and Trademark Office as tantamount to buying justice--those that can afford the fees can enter and utilize the system while those who cannot are excluded.

For the foregoing reasons, the university sector is opposed to any change in the current two-tier system of patent fees. If, as a consequence, of maintaining a small entity status for individual inventors, small businesses and non-profit organizations, including universities, there is a danger of a shortfall in revenue which adversely impacts on the efficient operation of the Patent and Trademark Office, Congress should reinstate a level of appropriations from taxpayer revenue to cover any such shortfall in the national interest.

In addition, the university sector advocates that the costs of operating the Patent and Trademark Office which confers no direct benefit on patent and trademark applicants but are in the interests of the national economy or are of benefit to the general public, for example, operation of the public search room and engagement of the Patent and Trademark Office in

international affairs and appropriate legislative activities, should also be supported by the appropriation of public funds and not by user fees.

The university sector is further concerned with the proposal for authority in the Patent and Trademark Office to raise fees for non-specified processing, services and materials. Currently 35 USC 41(d) requires the setting of such fees to recover the estimated average cost to the Office of such processing, services or materials. Because of the Budget Reconciliation Act of 1990 and the decision that the Patent and Trademark Office should be wholly user fee supported, it can be anticipated that the Office would be forced to look upon such fees as "profit centers" to make up any shortfall in revenue experienced from operations in other areas. Since the universities must avail themselves of such services in their patent management functions, substantial increases in such fees would also impact adversely on the ability of universities to seek protection for valuable inventions and discoveries.

Because of their significant contributions to society as the result of the basic research which they conduct, it would seem both beneficial and logical that the university sector should continue to be accorded small entity status under all fees which are assessed for patenting and patent maintenance purposes.

As a last point, the university sector endorses the oversight of patent and trademark fees by Congress as set forth in Section 3 of S. 793.

The opportunity to present these views is sincerely appreciated. I will be pleased to answer any questions which the members of the Subcommittee have.

DEPENDENCE OF INDUSTRY ON ACADEMIC RESEARCH

INDUSTRY	PERCENTAGE DEPENDENT ON ACADEMIC RESEARCH	
	PRODUCTS	PROCESSES
INFORMATION PROCESSING	28	27
ELECTRICAL	9	7
CHEMICAL	8	6
INSTRUMENTS	21	3
DRUGS	44	37
METALS	22	21
OIL	2	2

SOURCE: SCIENCE & ENGINEERING INDICATORS-1989 (MANSFIELD)